METRIC

MIL-STD-1760D
1 August 2003

SUPERSEDING
MIL-STD-1760C
20 March 1997

DEPARTMENT OF DEFENSE

INTERFACE STANDARD

FOR

AIRCRAFT/STORE ELECTRICAL INTERCONNECTION SYSTEM

AMSC: N/A

AREA: SESS

DISTRIBUTION STATEMENT A. Approved for public release; distribution is unlimited.

FOREWORD

1. This standard is approved for use by all Departments and Agencies of the Department of Defense.

2. Prior to this standard, an aircraft and the stores which it carried were typically developed independently of each other or were developed exclusively for each other. This usually resulted in unique aircraft/store electrical interconnection requirements, the general proliferation of overall store interface designs, low levels of interoperability, and costly aircraft modifications to achieve required store utilization flexibility. Trends in store technology toward more complex store functions which require increasing amounts of avionics data and control information from aircraft systems were predicted to lead to insurmountable aircraft/store interfacing problems.

3. The goal is to develop aircraft that are compatible with a wide variety of stores and stores that are compatible with a wide variety of aircraft. This standard supports this goal by defining a standard electrical (and fiber optic) interconnection system for aircraft and stores. This interconnection system is based on use of a standard connector, a standard signal set and a standard serial digital data interface for control, monitor, and release of stores. Application of this standard to new and existing aircraft and new stores will significantly reduce and stabilize the number and variety of signals required at aircraft/store interfaces, minimize the impact of new stores on future stores management systems, and increase store interoperability among the services, within NATO, and with other allies.

4. Revision D does not change the fundamental MIL-STD-1760 interface. It includes newly defined requirements for 270 VDC power and message time tagging, adds a new appendix defining GPS RF signals, and makes other minor changes and corrections.

5. Changes between Revision C and Revision D are not marked in this document, but note references are added in the text, referring to notes in appendix C that explain the significant technical changes.

6. Some requirements in MIL-STD-1760 are stated by invoking other documents, including MIL-STD-1553 and MIL-DTL-38999. If tiering of requirements is limited to one level on a particular contract, it may be necessary to include references to these second tier documents in the contractual specification.

7. The following areas are limitations of this standard:

a. Requirements for mechanical, aerodynamic, logistic, and operational compatibility are not covered.

b. Since factors such as size, shape, loads, clearances, and functional limitations are not specified, full operability of stores on aircraft cannot be assured.

c. Signals for emergency jettison of stores are not specified. However, this does not preclude the use of the signals in this standard if they are compatible with the requirements for emergency jettison.

d. This standard does not attempt to establish the EMI/EMC requirements on the aircraft or store, although it does define an interface that is generally capable of meeting these requirements.

8. Comments, suggestions, or questions on this document should be addressed to: ASC/ENOS, 2530 Loop Road West, Wright-Patterson AFB, Ohio 45433-7101 or email to Engineering.Standards@wpafb.af.mil. Since contact information can change, you may want to verify the currency of this address information using the ASSIST Online database at http://www.dodssp.daps.mil/.

TABLE OF CONTENTS [Note 1.]

PARAGRAPH ..... PAGE

FOREWORD ii
1. SCOPE 1
1.1 Scope. 1
1.2 Purpose. 1
1.3 Application. 1
2. APPLICABLE DOCUMENTS 2
2.1 General. 2
2.2 Government documents. 2
2.2.1 Specifications, standards, and handbooks. 2
2.2.2 Other government documents, drawings, and publications. 3
2.3 Non-Government publications. 3
2.4 Order of precedence. 3
3. DEFINITIONS 4
3.1 Definitions. 4
3.1.1 Aircraft. 4
3.1.2 Aircraft/store Electrical Interconnection System (AEIS). 4
3.1.3 Electrical interface types. 4
3.1.3.1 Aircraft Station Interface (ASI). 4
3.1.3.2 Carriage Store Interface (CSI). 4
3.1.3.3 Carriage Store Station Interface (CSSI). 4
3.1.3.4 Mission Store Interface (MSI). 4
3.1.3.5 Routing Network Aircraft Subsystem Port (RNASP). 4
3.1.4 Provisions. 4
3.1.5 Store. 4
3.1.5.1 Carriage stores. 4
3.1.5.2 Mission stores. 5
3.1.5.3 Dispensers. 5
3.1.6 Stores management system. 5
3.1.7 Suspension and release equipment (S&RE). 5
3.1.8 Random noise. 5
3.1.9 Periodic noise. 5
3.1.10 Impulse noise. 5
3.1.11 Stimulated noise. 5
3.1.12 Common mode noise. 5
3.1.13 Latency. 5
3.1.14 Delay. 5
3.1.15 Power interruption. 5
3.2 Acronyms and abbreviations. 6
4. GENERAL REQUIREMENTS 7
4.1 Aircraft/store configurations. 7
4.2 Interface classes. [Note 3.] 7
4.3. Primary interface signal set. 7
4.3.1. High bandwidth (HB) interfaces. 7
4.3.1.1 Type A signal requirements. 10
4.3.1.2 Type B signal requirements. 10
4.3.1.3 Signal assignment. 10
4.3.2 Digital multiplex data bus interface. 10
4.3.3 Low bandwidth (LB) interface. 11
4.3.3.1 LB signal requirements. 11
4.3.3.2 Signal assignment. 11
4.3.4 Release consent interface. 11
4.3.5 Primary interlock interface. 13

PARAGRAPH ..... PAGE

4.3.6 Address interface. 13
4.3.7 Primary structure ground. [Note 5.] 13
4.3.8 Primary power. [Note 6.] 13
4.3.9 Fiber optic (FO) interfaces. 14
4.4 Auxiliary power interface signal set. 14
4.4.1 Auxiliary power. [Note 6.] 14
4.4.2 Auxiliary interlock interface. 14
4.4.3 Auxiliary structure ground. [Note 5.] 14
4.5 Interface connectors. 14
5. DETAILED REQUIREMENTS 15
5.1 Aircraft requirements. 15
5.1.1 Aircraft HB interfaces. 15
5.1.1.1 Minimum transfer capacity. 15
5.1.1.2 Type A signal path requirements. 15
5.1.1.3 Type B signal path requirements. 16
5.1.1.4 Ground reference. 16
5.1.2 Aircraft digital data bus interface. 24
5.1.2.1 Functional characteristics. 24
5.1.2.2 Electrical characteristics. 24
5.1.3 Aircraft LB interface. 25
5.1.3.1 Minimum transfer capacity. 25
5.1.3.2 Input/output impedance. 25
5.1.3.3 Insertion gain. 25
5.1.3.4 Equalization requirements. 25
5.1.3.5 Signal path dc offset. 26
5.1.3.6 Noise. 26
5.1.3.7 Ground reference. 26
5.1.4 Aircraft release consent interface. 27
5.1.4.1 Voltage level. 27
5.1.4.2 Current level. 28
5.1.4.3 Stabilization time. 28
5.1.4.4 Enable lead time. 28
5.1.4.5 Inhibit delay. 28
5.1.4.6 Ground reference. 28
5.1.5 Aircraft interlock interface. 28
5.1.6 Aircraft address interface. 28
5.1.6.1 Address assignment. 28
5.1.6.2 Address signal. 29
5.1.6.3 Logic thresholds. 29
5.1.6.4 Response characteristics. 29
5.1.6.5 Address isolation. 29
5.1.7 Aircraft structure ground. [Note 12.] 29
5.1.8 Aircraft 28 V dc power interface. 30
5.1.8.1 Independent control. 30
5.1.8.2 Voltage level. [Note 13.] 30
5.1.8.3 Current capacity. 30
5.1.8.4 Overcurrent protection. 30
5.1.8.5 Off-state leakage current. 30
5.1.8.6 Stabilization time. 33
5.1.8.7 Ground reference. 33
5.1.8.8 Power application. 33
5.1.9 Aircraft 115/200 V ac power interface. 33
5.1.9.1 Independent control and dead facing. 33
5.1.9.2 Voltage level. [Note 13.] 34

PARAGRAPH ..... PAGE

5.1.9.3 Current capacity. 34
5.1.9.4 Overcurrent protection. 34
5.1.9.5 Off-state leakage current. 34
5.1.9.6 Stabilization time. 34
5.1.9.7 Phase rotation. 34
5.1.9.8 Load power factor. 34
5.1.9.9 Phase power unbalance. 35
5.1.9.10 Ground reference. 35
5.1.9.11 Power application. 35
5.1.10 Aircraft 270 V dc power interface. [Note 17.] 35
5.1.10.1 Independent control and dead facing. 35
5.1.10.2 Voltage level. 35
5.1.10.3 Current capacity. 36
5.1.10.4 Overcurrent protection. 36
5.1.10.5 Off-state leakage current. 36
5.1.10.6 Stabilization time. 36
5.1.10.7 Ground reference. 36
5.1.10.8 Power application. 36
5.1.11 Aircraft fiber optic interface. 36
5.1.12 Initialization. 36
5.1.12.1 Pre-initialization conditions. 37
5.1.12.2 Power application. [Note 18.] 37
5.1.12.3 First communication. 37
5.2 Mission store requirements (measured at the MSI). 37
5.2.1 Mission store HB interfaces. 37
5.2.1.2 Electrical characteristics (type A). 37
5.2.1.3 Electrical characteristics (type B). 37
5.2.1.4 Ground reference. 37
5.2.2 Mission store data bus interface. 37
5.2.2.1 Functional characteristics. 38
5.2.2.2 Electrical characteristics. 38
5.2.3 Mission store LB interface. 38
5.2.3.1 Input/output impedance. 38
5.2.3.2 Ground reference. 38
5.2.4 Mission store release consent interface. 39
5.2.4.1 Voltage level. 39
5.2.4.2 Current level. 39
5.2.4.3 Stabilization time. 39
5.2.4.4 Enable lead time. 39
5.2.4.5 Inhibit lead time. 39
5.2.4.6 Ground reference. 39
5.2.5 Mission store interlock interface. 40
5.2.6 Mission store address interface. 40
5.2.6.1 Address assignment. 40
5.2.6.2 Address signal. 40
5.2.6.3 Logic threshold. 41
5.2.6.4 Response characteristics. 41
5.2.7 Mission store structure ground. [Note 19.] 41
5.2.8 Mission store 28 V dc power interface. 41
5.2.8.1 Voltage level. 41
5.2.8.2 Load current. 41
5.2.8.3 Load isolation. 42
5.2.8.4 Overcurrent compatibility. 42
5.2.8.5 Off-state leakage current. 42

PARAGRAPH ..... PAGE

5.2.8.6 Stabilization time. 42
5.2.8.7 Ground reference. 42
5.2.8.8 Power utilization. 42
5.2.9 Mission store 115/200 V ac power interface. 42
5.2.9.1 Voltage level. 42
5.2.9.2 Load current. 43
5.2.9.3 Load isolation. [Note 20.] 43
5.2.9.4 Overcurrent compatibility. 43
5.2.9.5 Off-state leakage current. 43
5.2.9.6 Stabilization time. 43
5.2.9.7 Load power factor. 43
5.2.9.8 Phase unbalance. 43
5.2.9.9 Ground reference. [Note 21.] 43
5.2.9.10 Power utilization. 43
5.2.10 Mission store 270 V dc power interface. [Note 17.] 44
5.2.10.1 Voltage level. 44
5.2.10.2 Load current. 44
5.2.10.3 Load isolation. 44
5.2.10.4 Overcurrent compatibility. 44
5.2.10.5 Off-state leakage current. 44
5.2.10.6 Stabilization time. 44
5.2.10.7 Ground reference. 44
5.2.10.8 Power utilization. 45
5.2.11 Mission store fiber optic interface. 45
5.2.12 Store initialization. 45
5.2.12.1 Pre-initialization conditions. 45
5.2.12.2 Power application. [Note 18.] 45
5.2.12.3 Address determination. 45
5.2.12.4 First response. 45
5.2.12.5 First required non-busy response. 45
5.3 Carriage store requirements. 46
5.3.1 Carriage store HB interfaces. 46
5.3.1.1 Minimum transfer capacity. 46
5.3.1.2 Type A signal path characteristics. 46
5.3.1.3 Signal path electrical characteristics (type B). 47
5.3.1.4 Ground reference (type A). 47
5.3.1.5 Ground reference (type B). 48
5.3.2 Carriage store data bus interface. 48
5.3.2.1 CSI. 48
5.3.2.2 CSSI. 48
5.3.3 Carriage store LB interface. 48
5.3.3.1 Minimum transfer capacity. 49
5.3.3.2 Input/output impedance. 49
5.3.3.3 Insertion gain. 49
5.3.3.4 Equalization. 49
5.3.3.5 Signal path dc offset. 49
5.3.3.6 Noise. 49
5.3.3.7 Ground reference. 50
5.3.4 Carriage store release consent interface. 51
5.3.4.1 CSI. 51
5.3.4.2 CSSI. 51
5.3.4.3 CSI to CSSI transfer. 51
5.3.5 Carriage store interlock interface. 51
5.3.5.1 CSI. 51

PARAGRAPH ..... PAGE

5.3.5.2 CSSI. 51
5.3.5.3 Isolation. 51
5.3.6 Carriage store address interface. 51
5.3.6.1 CSI. 52
5.3.6.2 CSSI. 52
5.3.7 Carriage store structure ground. [Note 19.] 52
5.3.7.1 CSI Structure Ground Characteristics. 52
5.3.7.2 CSSI Structure Ground Characteristics. 52
5.3.8 Carriage store 28 V dc power interface. 52
5.3.8.1 CSI. 52
5.3.8.2 CSSI. 52
5.3.9 Carriage store 115/200 V ac power interfaces. 52
5.3.9.1 CSI. 53
5.3.9.2 CSSI. 53
5.3.10 Carriage store 270 V dc power interfaces. [Note 17.] 54
5.3.10.1 CSI. 54
5.3.10.2 CSSI. 54
5.3.11 Carriage store fiber optic interface. 54
5.3.12 Carriage store initialization. 54
5.4 Umbilical cable requirements. 54
5.4.1 Primary umbilical HB interfaces. 54
5.4.2 Primary umbilical data bus interface. 54
5.4.3 Primary umbilical LB interface. 55
5.4.4 Primary umbilical release consent interface. 55
5.4.5 Umbilical interlock interface. 55
5.4.6 Primary umbilical address interface. 55
5.4.7 Umbilical structure ground. 55
5.4.8 Umbilical 28 V dc power interface. 55
5.4.9 Umbilical 115 V ac power interface. 55
5.4.10 Umbilical 270 V dc power interface. [Note 18.] 55
5.4.11 Primary umbilical fiber optic interface. 55
5.4.12 Umbilical gross shield. 55
5.5 Power interface interrupts. 56
5.5.1 Mission store compatibility. [Note 22.] 56
5.5.2 Carriage store compatibility. [Note 22.] 56
5.5.3 Aircraft compatibility. [Note 22.] 56
5.5.3.1 Full initialization. 56
5.5.3.2 Partial initialization. 56
5.5.4 Store power interrupt notification. 56
5.6 Connector characteristics. 56
5.6.1 Primary interface connectors. 56
5.6.2 Auxiliary power interface connector. 57
5.6.3 Connector receptacle. 57
5.6.4 Plugged cavities. [Note 23.] 57
5.6.5 Umbilical primary interface connectors. 57
5.6.6 Umbilical auxiliary interface connectors. [Note 24.] 57
5.6.7 Connector keyway orientation. 57
5.6.7.1 ASI and CSSI. 57
5.6.7.2 MSI and CSI. 58
5.6.7.3 Umbilical cable. 58
5.6.8 Connector location. 58
5.6.8.1 ASI and CSSI. 58
5.6.8.2 MSI and CSI. 58

PARAGRAPH ..... PAGE

6. NOTES 63
6.1 Intended use. 63
6.1.1 Implementation. 63
6.2 Issue of DoDISS. 63
6.3 International standardization agreements. 63
6.4 Tailoring guidance. 63
6.5 Keyword listing. 63
6.6 Changes from previous issue. 64
A.1. SCOPE 65
A.1.1 Purpose. 65
A.2. APPLICABLE DOCUMENTS 65
A.2.1 References. 65
A.2.2 Government documents, drawings and publications. 65
A.3. DEFINITIONS, ACRONYMS AND ABBREVIATIONS 65
A.3.1 Definitions. 65
A.3.1.1 Navstar global positioning system (GPS). 65
A.3.1.2 L1 and L2. 65
A.3.1.3 Power gain. 65
A.3.1.4 Correlation loss. 65
A.3.1.5 Effective gain. 65
A.3.1.6 Figure of merit. 66
A.3.1.7 Group delay. 66
A.3.1.8 Aircraft station GPS RF output. 66
A.3.1.9 L1_P(Y) signal. 66
A.3.1.10 L2_P(Y) signal. 66
A.3.1.11 L1_C/A signal. 66
A.3.2 Acronyms and abbreviations. 66
A.4. GENERAL REQUIREMENTS 66
A.4.1 Aircraft/store configurations. 66
A.4.2 GPS RF signal requirements. 67
A.5. AIRCRAFT REQUIREMENTS 67
A.5.1 Voltage standing wave ratio (VSWR). 68
A.5.2 Effective gain. 68
A.5.3 Group delay. 68
A.5.4 Group delay uncertainty. 68
A.5.5 Figure of Merit. 68
A.5.6 Signal path dc offset. 68
A.6. MISSION STORE REQUIREMENTS 68
A.6.1 Voltage standing wave ratio (VSWR). 68
A.6.2 Signal power. 68
A.6.3 Signal to noise ratio. 69
A.6.4 Signal path dc offset. 69
B.1 SCOPE 71
B.1.1 Purpose. 71
B.2 APPLICABLE DOCUMENTS 71
B.2.1 References. 71
B.2.2 Government documents. 71
B.2.3 Other Government documents, drawings, and publications. 71
B.2.4 Non-Government publications. 72
B.2.4.1 AMERICAN NATIONAL STANDARDS INSTITUTE 72
B.2.4.2 INTERNATIONAL STANDARDS ORGANIZATION 72
B.2.4.3 SOCIETY OF AUTOMOTIVE ENGINEERS 72

PARAGRAPH ..... PAGE

B.3 DEFINITIONS 72
B.3.1 Definitions. 72
B.3.1.1 Data entity. 72
B.3.1.2 Data set. 72
B.3.1.3 Data validity. 72
B.3.1.4 Mass data transfer. 72
B.3.1.4.1 Back-to-back transfer. 72
B.3.1.4.2 Block. 73
B.3.1.4.3 Download. 73
B.3.1.4.4 File. 73
B.3.1.4.5 Record. 73
B.3.1.4.6 Upload. 73
B.3.1.4.7 Buffer. 73
B.3.2 Acronyms and abbreviations. 73
B.4 REQUIREMENTS 73
B.4.1 Communication rules. 73
B.4.1.1 Command word. 73
B.4.1.1.1 Remote terminal address field. 73
B.4.1.1.2 Subaddress/mode field. 73
B.4.1.1.3 Mode commands. 73
B.4.1.2 Status word. 74
B.4.1.2.1 Service request bit. 75
B.4.1.2.2 Busy bit. 75
B.4.1.2.3 Subsystem flag bit. 75
B.4.1.2.4 Terminal flag bit. 75
B.4.1.3 Data words. 75
B.4.1.4 Internal state change. 75
B.4.1.5 Protocol execution. 75
B.4.1.5.1 Protocol checks. 75
B.4.1.5.2 Checksum requirement. 75
B.4.1.5.3 Execution time. 76
B.4.1.5.4 Service request notification. 77
B.4.1.5.5 Request servicing. 77
B.4.1.5.6 Vector word demand. 77
B.4.1.5.7 General form of service request routine. 77
B.4.1.5.8 Mass data transfer. 77
B.4.1.5.9 Carriage store routing. 77
B.4.1.5.10 Data consistency. 77
B.4.1.5.11 Broadcast. 77
B.4.1.5.12 Time tagging. [Note 29.] 78
B.4.2 Message requirements. 78
B.4.2.1 Base message data format. 78
B.4.2.1.1 Data word 1. 78
B.4.2.1.2 Data words 2-32 and 2-30. 78
B.4.2.2 Standard messages. 79
B.4.2.2.1 Store control. 79
B.4.2.2.2 Store monitor. 79
B.4.2.2.3 Store description. 79
B.4.2.2.4 Nuclear weapon control. 79
B.4.2.2.5 Nuclear weapon monitor. 79
B.4.2.2.6 Aircraft description. 79
B.4.2.3 Mass data transfer messages. 80
B.4.2.3.1 File Structure. 80
B.4.2.3.2 Message formats. 80

PARAGRAPH ..... PAGE

B.4.2.3.3 MDT file/record checksum. 85
B.4.2.3.4 Modes of operation. 85
B.4.2.4 Protocol for time tagging. 92
B.4.2.4.1 Time tag reference time. [Note 29.] 93
B.4.2.4.2 Aircraft system time at reset. 93
B.4.2.4.3 Receive time tag. 93
B.4.2.4.4. Transmit time tag. [Note 29.] 93
B.4.3 Standard data entities. 94

FIGURES ..... PAGE

FIGURE 1. Aircraft-store configuration examples. 8
FIGURE 2. Primary interface signal set. [Note 4.] 9
FIGURE 3. Auxiliary power signal set. [Note 4.] 10
FIGURE 4. Conceptual HB and LB interface configurations. 12
FIGURE 5. Cosine-squared T signal requirements. 17
FIGURE 6. Cosine-squared 2T signal requirements. 18
FIGURE 7. 2T Bar signal requirements (1.0V). 19
FIGURE 8. 2T Bar signal requirements (1.3V). 20
FIGURE 9. Gain misequalization envelope. [Note 10.] 21
FIGURE 10. Random noise weighting function. 21
FIGURE 11. Periodic noise weighting function. 22
FIGURE 12. Common mode noise weighting function. 22
FIGURE 13. Equivalent circuits of HB interfaces. 23
FIGURE 14. ASI output waveform envelope. 25
FIGURE 15. Gain misequalization envelope (aircraft, LB). 26
FIGURE 16. Equivalent circuits for LB interfaces. 27
FIGURE 17. Primary interface current level. [Note 15.] 31
FIGURE 18. Auxiliary interface current level. [Note 15.] 32
FIGURE 19. Stabilization time. 33
FIGURE 20. Power factor limits. 35
FIGURE 21. Equivalent circuits of carriage store HB Type A signal paths. 48
FIGURE 22. Maximum gain misequalization envelope (LB, carriage store). 49
FIGURE 23. Equivalent circuits for LB carriage store signal paths. 50
FIGURE 24. Carriage store voltage drop diagram. 53
FIGURE 25. Connector orientation. 62
FIGURE A- 1. GPS RF Interface configurations. 67
FIGURE B- 1. Examples of general form of service request protocol. 95
FIGURE B- 2. Aircraft body axis system. 96
FIGURE B- 3. Earth axis systems. 97
FIGURE B- 4. Aircraft, target and waypoint position XYZ to fixed point. 98
FIGURE B- 5. Earth aircraft alignment. 99
FIGURE B- 6. Aircraft-store alignment. 100
FIGURE B- 7. Store body axis system. 102
FIGURE B- 8. Target and waypoint position XYZ from current position. 102
FIGURE B- 9. Target position/store trajectory (polar). 103
FIGURE B- 10. Target sector and segment position. 104

TABLES..... PAGE

TABLE I. Carriage store HB signal transfer. 46
TABLE II. Primary signal set connector contacts/termini and seal plugs. 59
TABLE III. Primary signal set contact functional assignment. [Note 25.]..... 60
TABLE IV. Auxiliary power signal set connector contacts and seal plugs. [Note 26.]..... 61
TABLE V. Auxiliary power signal set contact functional assignment. 61
TABLE B- I. Subaddress/mode field application. 105
TABLE B- II. Vector word (asynchronous message demand) format. 107
TABLE B- III. Vector word (asynchronous action demand) format. 108
TABLE B- IV. DELETED 108
TABLE B- V. DELETED. 108
TABLE B- VI. DELETED. 108
TABLE B- VII. Base message format (BC-RT transfer). 109
TABLE B- VIII. Base message format (RT-BC transfer). 110
TABLE B- IX. Base message format (RT-RT transfer). 111
TABLE B- X. Header word. 112
TABLE B- XI. Store control (BC-RT transfer). **1/** 113
TABLE B- XII. Store monitor (RT-BC transfer). **1/** 115
TABLE B- XIII. Store description message. **1/** 116
TABLE B- XIV. Country code. 117
TABLE B- XV. Store identity (binary). 118
TABLE B- XVI. Store or aircraft identity (ASCII). 119
TABLE B- XVII. Transfer Control (TC) message format. 120
TABLE B- XVIII. Instruction word. 121
TABLE B- XIX. Allowable instruction type field bit states. [Note 31.]..... 122
TABLE B- XX. Subaddress select. 123
TABLE B- XXI. Dual binary number. 124
TABLE B- XXII. Transfer Monitor (TM) message format. 125
TABLE B- XXIII. Transfer mode status. 126
TABLE B- XXIV. Transfer Data (TD) message format. **1/**..... 127
TABLE B- XXV. Allowable mode status field bit states. 128
TABLE B- XXVI. Data entity list. [Note 32.]..... 129
TABLE B- XXVII. Linear data entities. 145
TABLE B- XXVIII. 2's complement format. 147
TABLE B- XXIX. Unsigned format. 148
TABLE B- XXX. Binary scientific notation format. 149
TABLE B- XXXI. Invalidity word. 150
TABLE B- XXXII. Critical control 1. 151
TABLE B- XXXIII. Critical control 2. 153
TABLE B- XXXIV. Critical authority. 154
TABLE B- XXXV. Critical monitor 1. 155
TABLE B- XXXVI. Critical monitor 2. 156
TABLE B- XXXVII. Fuzing mode 1. 157
TABLE B- XXXVIII. Fuzing/arming mode status 1. 158
TABLE B- XXXIX. Protocol status. 159
TABLE B- XL. ASCII packed. 160
TABLE B- XLI. Discriminator description. 161
TABLE B- XLII. Header word definition. 162
TABLE B- XLIII. Fuzing mode 2. 163
TABLE B- XLIV. Fuzing/arming mode status 2. 164
TABLE B- XLV. Dispersion data word. 165
TABLE B- XLVI. Two zone format. 166
TABLE B- XLVII. Aircraft description message. **1/**..... 167
TABLE B- XLVIII. Store station number and pylon/bay identity. 168

APPENDICES ..... PAGE

APPENDIX A. Additional Interface Requirements for GPS RF Signals 65
APPENDIX B. Digital Data Bus Communication Rules and Message Requirements 71
APPENDIX C. Annotations Explaining Differences From Revision C Notice 1 169

CONCLUDING MATERIAL 173

This page intentionally blank.

1. SCOPE

1.1 Scope.

This standard defines implementation requirements for the Aircraft/Store Electrical (and fiber optic) Interconnection System (AEIS) in aircraft and stores. This interconnection system provides a common interfacing capability for the operation and employment of stores on aircraft, and includes:

a. The electrical (and fiber optic) interfaces at aircraft store stations, the interface on mission stores, the interface on carriage stores, and the characteristics of umbilical cables.

b. Interrelationships between aircraft and store interfaces.

c. Interrelationships between the interfaces at different store stations on an aircraft.

1.2 Purpose.

The purpose of this standard is to minimize the proliferation of electrical and optical interfacing variations required in aircraft for operating stores and minimize the proliferation of electrical and optical interfacing variations required in stores to interface with aircraft. The implementation of this standard should enhance the interoperability of stores and aircraft by defining specific electrical/optical, logical, and physical requirements for the AEIS.

1.3 Application.

This standard applies to all aircraft and stores that electrically interface with each other. This coverage encompasses stores and aircraft presently in concept development stages and future aircraft and store development. This standard also applies to existing aircraft which are required to carry MIL-STD-1760 compatible stores.

2. APPLICABLE DOCUMENTS

2.1 General.

The documents listed in this section are specified in sections 3, 4, and 5 of this standard. This section does not include documents cited in other sections of this standard or recommended for additional information or as examples. While every effort has been made to ensure the completeness of this list, document users are cautioned that they must meet all specified requirements documents cited in sections 3, 4, and 5 of this standard, whether or not they are listed.

2.2 Government documents.

2.2.1 Specifications, standards, and handbooks.

The following specifications, standards, and handbooks form a part of this document to the extent specified herein. Unless otherwise specified, the issues of these documents are those cited in the solicitation or contract.

SPECIFICATIONS [Note 2.]

Department of Defense

MIL-C-17/94	Cable, Radio Frequency Flexible Coaxial 75 Ohms M17/094 RGG179
MIL-C-17/113	Cable, Radio Frequency, Flexible, Coaxial, 50 Ohms, M17/113-RG316
MIL-A-8591	Airborne Stores, Suspension Equipment and Aircraft-Store Interface (Carriage Phase); General Design Criteria For
MIL- DTL-38999	Connectors, Electrical, Circular, Miniature, High Density, Quick Disconnect (Bayonet, Threaded and Breech Coupling), Environment Resistant, Removable Crimp and Hermetic Solder Contacts, General Specification For
MIL-C-39029	Contacts, Electrical Connector, General Specification For
MIL-C-39029/28	Contacts, Electrical Connector, Pin, Crimp Removable, Shielded, Size 12 (For MIL-DTL-38999 Series I, II, III, and IV Connectors)
MIL-C-39029/56	Contacts, Electrical Connector, Socket, Crimp Removable, (For MIL-DTL-38999 Series I, III and IV Connectors)
MIL-C-39029/58	Contacts, Electrical Connector, Pin, Crimp Removable, (For MIL-C-24308, MIL-DTL-38999 Series I, II, III, IV and MIL-C-55302/69 and MIL-C-83733 Connectors
MIL-C-39029/75	Contacts, Electrical Connector, Socket, Crimp Removable, Shielded, Size 12 (For MIL-DTL-38999 Series I, III, and IV Connectors)
MIL-C-39029/90	Contact, Electrical Connector, Concentric Twinax, Pin, Size 8
MIL-C-39029/91	Contact, Electrical Connector, Concentric Twinax, Socket, Shielded, Size 8
MIL-C-39029/102	Contacts, Electrical Connector, Pin, Crimp Removable, Coaxial, Size 12, (For MIL-DTL-38999 Series I, II, III and IV Connectors)
MIL-C-39029/103	Contacts, Electrical Connector, Socket, Crimp Removable, Coaxial, Size 12 (For MIL-DTL-38999 Series I, II, III and IV Connectors)
MIL- DTL-83538	Connectors and Accessories, Electrical, Circular, Umbilical, Environment Resistant, Removable Crimp Contacts, For MIL-STD-1760 Applications (Metric), General Specification For
MS27488	Plug, End Seal, Electrical Connector

STANDARDS

Department of Defense

MIL-STD-704	Aircraft Electric Power Characteristics
MIL-STD-1553B Not. 4	Digital Time Division Command/Response Multiplex Data Bus NOTE: Revision B Notice 4 is specifically required.
MIL-STD-1560	Insert Arrangements for MIL-DTL-38999 and MIL-C-27599 Electrical, Circular Connectors

(Unless otherwise indicated, copies of the above specifications, standards, and handbooks are available from the Standardization Documents Order Desk, 700 Robbins Avenue, Building 4D, Philadelphia, PA 19111-5094 or http://assist.daps.dla.mil/quicksearch/ or http://www.dodssp.daps.mil/.)

2.2.2 Other government documents, drawings, and publications.
The following other Government documents, drawings, and publications form a part of this document to the extent specified herein. Unless otherwise specified, the issues are those cited in the solicitation.

NATO

STANAG 3350 AVS	Analogue Video Standard for Aircraft System Applications
STANAG 3837	Aircraft Stores Electrical Interconnection System
STANAG 3838	Digital Time Division Command/Response Multiplex Data Bus

(Copies of NATO standards are available from the Standardization Document Order Desk, 700 Robbins Avenue, Building 4D, Philadelphia, PA 19111-5094, phone (215) 697-2179 or http://assist.daps.dla.mil/quicksearch/ or http://www.dodssp.daps.mil/.)

2.3 Non-Government publications.

The following documents form a part of this document to the extent specified herein. Unless otherwise specified, the issues of the documents which are DoD adopted are those listed in the issue of the DoDISS cited in the solicitation. Unless otherwise specified, the issues of documents not listed in the DoDISS are the issues of the documents cited in the solicitation (see 6.2).

SOCIETY OF AUTOMOTIVE ENGINEERS, INC.

SAE-AS15531	Digital Time Division Command/Response Multiplex Data Bus
SAE-AS85049	Connector Accessories, Electrical General Specification for

(Copies of SAE documents may be obtained from: Society of Automotive Engineers, Inc., 400 Commonwealth Dr., Warrendale, PA 15096-0001, phone (412) 776-4841 or http://www.sae.org/misc/store.htm.)

2.4 Order of precedence.

In the event of a conflict between the text of this document and the references cited herein, the text of this document takes precedence. Nothing in this document, however, supersedes applicable laws and regulations unless a specific exemption has been obtained.

3. DEFINITIONS

3.1 Definitions.

Definitions applicable to this standard are as follows.

3.1.1 Aircraft.

Any vehicle designed to be supported by air, being borne up either by the dynamic action of the air upon the surfaces of the vehicle, or by its own buoyancy. The term includes fixed and movable wing airplanes, helicopters, gliders, and airships, but excludes air-launched missiles, target drones, and flying bombs.

3.1.2 Aircraft/store Electrical Interconnection System (AEIS).

The AEIS is a system composed of a collection of electrical (and fiber optic) interfaces on aircraft and stores through which aircraft energize, control, and employ stores. The AEIS consists of the electrical interfaces and interrelationships between the interfaces necessary for the transfer of electrical power and data between aircraft and stores and from one store to another store via the aircraft.

3.1.3 Electrical interface types.

The five electrical interface types for the aircraft/store electrical interconnection system will be as specified below.

3.1.3.1 Aircraft Station Interface (ASI).

The electrical interface(s) on the aircraft structure where the mission or carriage store(s) is electrically connected. The connection is usually on the aircraft side of an aircraft-to-store umbilical cable. The aircraft station interface locations include, but are not limited to, pylons, conformal and fuselage hard points, internal weapon bays, and wing tips (see 4.1).

3.1.3.2 Carriage Store Interface (CSI).

The electrical interface on the carriage store structure where the aircraft is electrically connected. This connection is usually on the store side of an aircraft-to-store umbilical cable (see 4.1).

3.1.3.3 Carriage Store Station Interface (CSSI).

The electrical interface(s) on the carriage store structure where the mission store(s) are electrically connected. This connection is usually on the carriage store side of an umbilical cable (see 4.1).

3.1.3.4 Mission Store Interface (MSI).

The electrical interface on the mission store external structure where the aircraft or carriage store is electrically connected. This connection is usually on the mission store side of an umbilical cable (see 4.1).

3.1.3.5 Routing Network Aircraft Subsystem Port (RNASP).

The electrical interface between the high bandwidth network or low bandwidth network and other subsystems within the aircraft. This interface point is defined in order to identify the “aircraft” end of the high bandwidth and low bandwidth networks and allow network performance to be specified in two-port network terms.

3.1.4 Provisions.

Space in all feed-through connections and in all wire runs that will allow future incorporation in the aircraft or store without modification other than the addition or changes to connectors, cables, and hardware/software necessary to control the added functions.

3.1.5 Store.

Any device intended for internal or external carriage and mounted on aircraft suspension and release equipment, whether or not the item is intended to be separated in flight from the aircraft. Stores are classified in three categories as specified below.

3.1.5.1 Carriage stores.

Suspension and release equipment that is mounted on aircraft on a non-permanent basis as a store, and is intended to carry other MIL-STD-1760 compatible store(s), will be classified as a carriage store.

Carriage store includes both single adapters and multiple store carriers. Pylons and primary racks (such as an MAU-12 and BRU-10) will not be considered carriage stores.

3.1.5.2 Mission stores.
All stores excluding suspension and release equipment (carriage stores, dispensers) are classified as mission stores. In general, these stores directly support a specific mission of an aircraft. Mission stores include, but are not limited to, missiles, rockets, bombs, torpedoes, buoys, flares, pods, and fuel tanks.

3.1.5.3 Dispensers.
Equipment that is mounted on an aircraft on a non-permanent basis as a store and is intended to carry devices that are non-compliant with MIL-STD-1760 is classified as a dispenser. Dispensers include, but are not limited to, chaff and flare dispensers, rocket pods, and small munitions dispensers. This standard does not include requirements for dispensers. It is assumed that a dispenser's interface to the aircraft or carriage store will comply with the MSI requirements herein, unless the dispenser will never be carried on a carriage store, in which case it may use the CSI requirements.

3.1.6 Stores management system.
The avionics subsystem which controls and monitors the operational state of aircraft installed stores and provides and manages the communications between aircraft stores and other aircraft subsystems.

3.1.7 Suspension and release equipment (S&RE).
All airborne devices used for carriage, suspension, employment, and jettison of stores, such as, but not limited to, racks, adapters, launchers, and pylons.

3.1.8 Random noise.
Randomly occurring noise which is distributed over a large bandwidth (sometimes known as white or pink noise). Random noise which is keyed on and off from time to time (sometimes known as burst noise) is included.

3.1.9 Periodic noise.
Noise made up of discrete frequency components. Periodic noise includes the effects of crosstalk from aircraft and store signal sources.

3.1.10 Impulse noise.
Spurious spikes which may occur randomly or at fixed intervals.

3.1.11 Stimulated noise.
Additional noise which is induced by the presence of an input signal.

3.1.12 Common mode noise.

a. For HB interfaces, common mode noise is the potential difference between the signal return (shield) connection and the local structure ground.

b. For LB interfaces, common mode noise is the sum of the potential differences between (i) the non-inverting connection and local structure ground, and (ii) the inverting connection and local structure ground.

3.1.13 Latency.
Signal or data latency is the time difference between a signal or data output of a system and the time at which the signal or data was valid.

3.1.14 Delay.
Signal or data delay is the elapsed time between the input stimulus and output response of a particular signal or data path.

3.1.15 Power interruption.
An excursion of aircraft power outside the specified normal steady state limits established by this standard.

3.2 Acronyms and abbreviations.

The following acronyms and abbreviations are applicable.

AEIS	Aircraft/Store Electrical Interconnection System
ANSI	American National Standards Institute
A/R	as required
ASCII	American Standard Code for Information Interchange
ASI	Aircraft Station Interface
BC	Bus Controller
BCH	Bose-Chaudhuri Hocquenghem (codes)
BIT	Built-In-Test
CSI	Carriage Store Interface
CSSI	Carriage Store Station Interface
dB	decibel
dBm	decibels above 1 milliwatt
DoDISS	Department of Defense Index of Specifications and Standards
EIA	Electronic Industries Association
EMC	Electromagnetic Compatibility
EMI	Electromagnetic Interference
GHz	gigahertz
HB	High Bandwidth
Hz	hertz
ICD	Interface Control Document
ISO	International Standards Organization
kHz	kilohertz
kVA	kilovolt-ampere
LB	Low Bandwidth
LLSP	Lower Least Significant Part
LSB	Least Significant Bit
LSP	Least Significant Part
MHz	megahertz
ms	millisecond
MSI	Mission Store Interface
MSB	Most Significant Bit
MSP	Most Significant Part
MUX	Multiplex (Digital Data Interface)
NATO	North Atlantic Treaty Organization
pp	peak-to-peak
PRF	Pulse Repetition Frequency
RMS	Root Mean Squared
RNASP	Routing Network Aircraft System Port
RT	Remote Terminal
S&RE	Suspension and Release Equipment
SMS	Stores Management System
STANAG	NATO Standardization Agreement
TC	Transfer Control
TD	Transfer Data
TM	Transfer Monitor
V	volt

4. GENERAL REQUIREMENTS

4.1 Aircraft/store configurations.

This standard provides for a variety of aircraft/store configurations, as depicted in FIGURE 1, by specifying requirements measurable at the Aircraft Station Interface (ASI), the Mission Store Interface (MSI), the Carriage Store Interface (CSI), the Carriage Store Station Interface (CSSI), and the Routing Network Aircraft System Port (RNASP). As depicted in FIGURE 1, the requirements on the ASI and MSI allow for possible installation of a carriage store between the ASI and MSI.

4.2 Interface classes. [Note 3.]

All functions of the AEIS shall be allocated between two separate signal sets; the primary interface signal set (FIGURE 2) and the auxiliary power signal set (FIGURE 3). Separate connectors shall be required for each set. The ASI shall implement, and the MSI shall be compatible with, one of the following interface classes.

a. Class I. Class I shall be the full primary interface.

b. Class IA. Class IA shall consist of class I, plus the auxiliary power interface.

c. Class II. Class II shall be the full primary interface without high bandwidth 2 and 4 and without fiber optic 1 and 2.

d. Class IIA. Class IIA shall consist of class II, plus the auxiliary power interface.

On carriage stores, the CSI and the CSSI(s) shall implement either the class I or class IA interface.

4.3. Primary interface signal set.

The primary interface signal set, as shown in FIGURE 2, shall be comprised of interfaces for high bandwidth signals, redundant data bus signals, low bandwidth signals, a specified number of dedicated discrete signals, aircraft power and fiber optic signals. Detailed electrical requirements for each of these functions at the ASI, MSI, CSI, and CSSI shall comply with the requirements of section 5 herein. Equipment shall not be functionally damaged by the removal of a termination on any interface.

4.3.1. High bandwidth (HB) interfaces.

HB interfaces shall support the transfer of two general signal types (type A and type B) sourced either by internal aircraft subsystems or by mission stores. Type A signals shall be compatible with a transmission passband of 20 Hz to 20 MHz. Type B signals shall be compatible with a transmission passband of 20 MHz to 1.6 GHz. The nominal source and sink impedance of the HB interfaces shall be 50 ohms for HB1 and HB2 and 75 ohms for HB3 and HB4. Each HB interface shall include a signal connection and a signal return (shield) connection. The requirements in 4.3.1 and sub paragraphs apply at the RNASP for signals originating in the aircraft and at the MSI for signals originating in the mission store. Any transmission scheme may be used between the RNASP and the ASI (e.g., the signal at the RNASP may be a purposely modulated or amplitude-adjusted or digitized form of the signal at the ASI). The aircraft requirements herein, however, are expressed in terms of deviations from an ideal linear, unity-gain non-inverting transmission system. Where a different transmission scheme is implemented between the RNASP and MSI, an equivalent signal fidelity shall be achieved for each stated requirement. These requirements apply with the interfaces terminated by the proper nominal impedance and include the effect of the applicable mating contacts. FIGURE 4 shows a number of possible interface configurations.

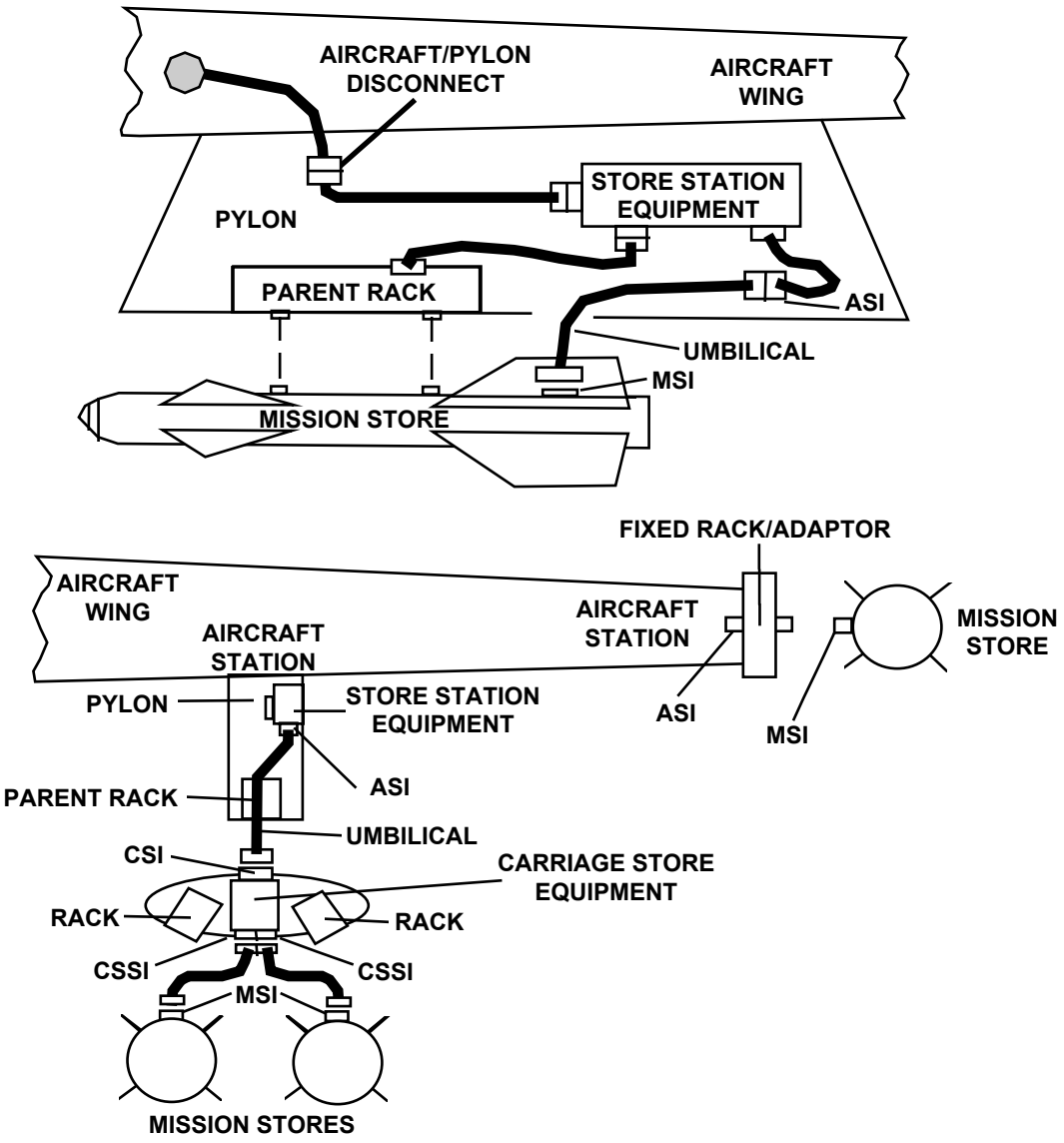

ASI - AIRCRAFT STATION INTERFACE
CSI - CARRIAGE STORE INTERFACE
CSSI - CARRIAGE STORE STATION INTERFACE
MSI - MISSION STORE INTERFACE

} ONLY THESE INTERFACES ARE CONTROLLED BY THIS STANDARD

FIGURE 1. Aircraft-store configuration examples.

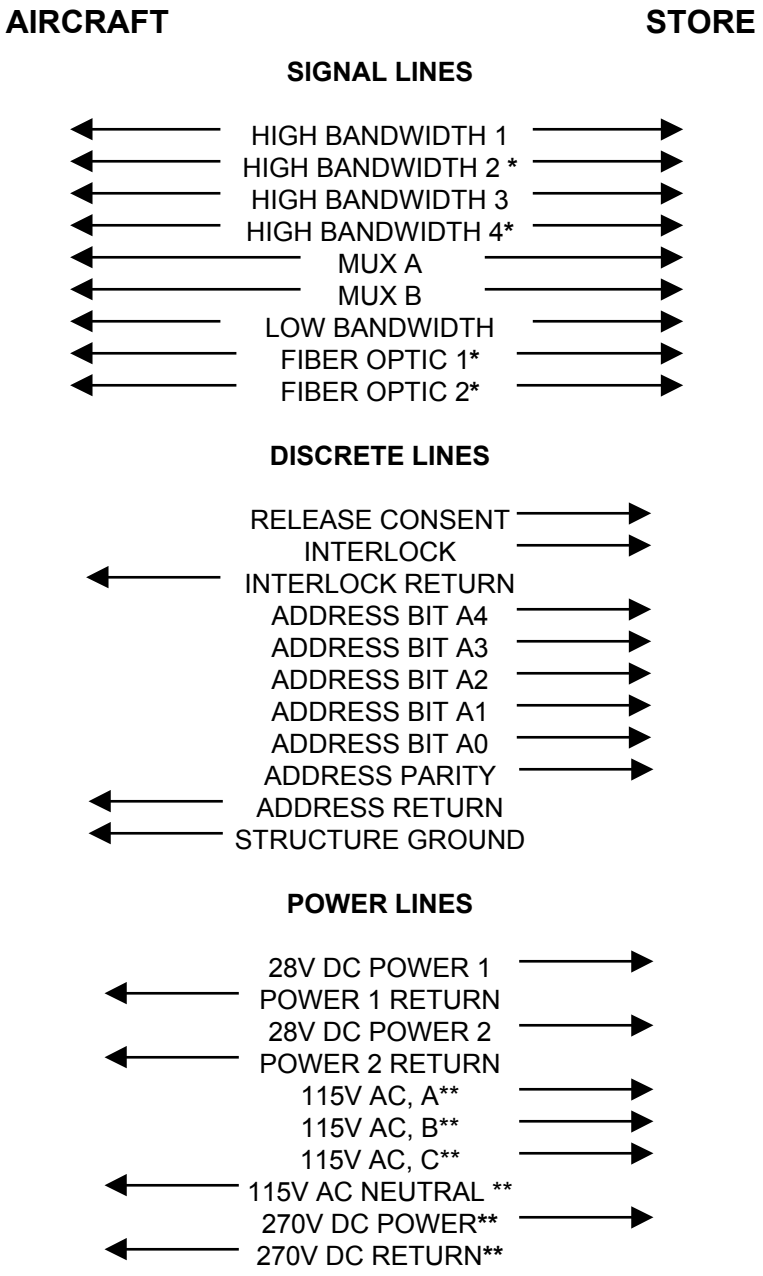

* NOT APPLICABLE TO CLASS II INTERFACE
** SEE CONDITIONAL REQUIREMENTS IN 4.3.8 AND 4.4.1

FIGURE 2. Primary interface signal set. [Note 4.]

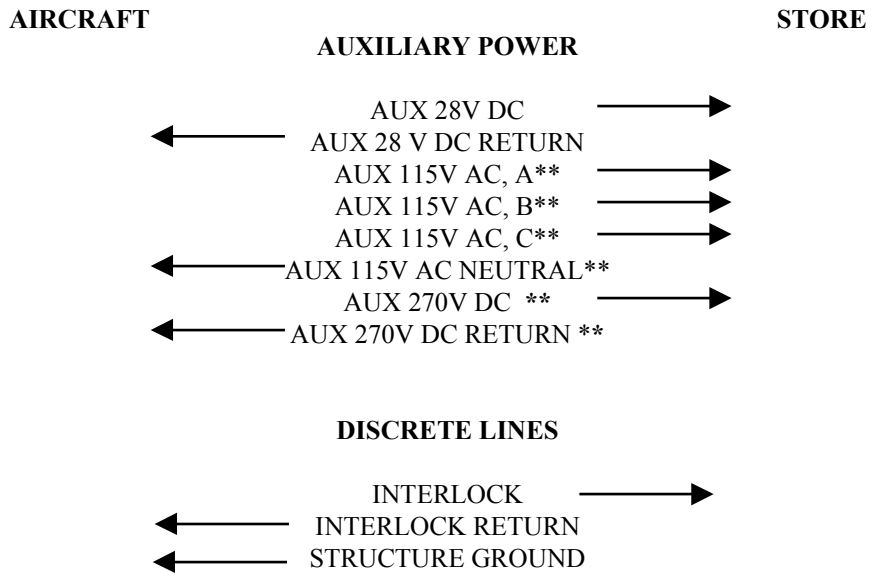

** SEE CONDITIONAL REQUIREMENTS IN 4.3.8 AND 4.4.1

FIGURE 3. Auxiliary power signal set. [Note 4.]

4.3.1.1 Type A signal requirements.

a. Type A signals shall be limited to 1.3 Vpp within the range of ±1.55 V under steady state conditions or within the range of ±2.0 V under transient conditions. The signal peak voltage shall return to within 5 percent of the steady state voltage limits in less than 250 ms following a transient change in the dc component of the signal.

b. The power spectral components above 20 MHz shall not exceed a limit line which decreases at a rate of 14 dB/octave. At 20 MHz the limit line shall be equal to the largest power spectral component determined over the nominal transmission passband of 4.3.1. The requirement shall apply until 200 MHz.

c. The slew rate shall not exceed 65 volts/microsecond.

4.3.1.2 Type B signal requirements.
Type B signal peak envelope power shall not exceed -20 dBmRMS. This requirement applies to the sum of the individual peak envelope power values if more than one signal is simultaneously present.

4.3.1.3 Signal assignment.
Signals on the HB interfaces shall be limited to the following:

a. Signals which comply with type B signal characteristics shall only be transferred on HB1.

b. Time correlation (synchronization, clocking and blanking) signals which comply with type A signal characteristics shall only be transferred on HB1 or HB2 or both.

c. Monochrome raster composite video shall only be transferred on HB3 or HB4 or both. Raster composite video shall comply with STANAG 3350.

4.3.2 Digital multiplex data bus interface.
The digital time division command/response multiplex data bus interface shall provide redundant channels (Mux A and Mux B) for transferring digital information, store control and store status data between aircraft and stores. The signals crossing the interface shall comply with the requirements of MIL-STD-1553 as augmented by the requirements of section 5 herein. SAE-AS-15531 may be used in

lieu of MIL-STD-1553. In the case of a carriage store, the S&RE functions shall be monitored and controlled via the CSI digital data bus interface.

4.3.3 Low bandwidth (LB) interface.
The LB interface shall support the transfer of LB signals sourced either by mission stores (measurable at the MSI) or by internal aircraft systems (measurable at the RNASP). The LB interface shall include a non-inverting signal connection, an inverting signal connection and a shield connection. The nominal source impedance shall be 0 ohms and the nominal sink impedance shall be 600 ohms. The following requirements apply at the signal source output (MSI or RNASP) when the output is terminated with 600 ohms. Any transmission scheme may be used between the RNASP and the ASI (e.g., the signal at the RNASP may be a purposely modulated or amplitude-adjusted or digitized form of the signal at the ASI). The aircraft requirements herein, however, are expressed in terms of deviations from an ideal linear, unity-gain non-inverting transmission system. Where a different transmission scheme is implemented between the RNASP and MSI, an equivalent signal fidelity shall be achieved for each stated requirement. These requirements include the effect of the applicable mating contacts. FIGURE 4 shows a number of possible configurations.

4.3.3.1 LB signal requirements.

a. The maximum instantaneous signal voltage (between the non-inverting connection and the inverting connection) shall be ±12 V. The peak to peak signal voltage shall be 12 V maximum.

b. The maximum instantaneous common mode voltage (the voltage between the non-inverting connection and reference ground added to the voltage between the inverting connection and reference ground) shall be ±1 V.

c. LB signals shall be compatible with a transmission passband of 300 Hz to 3.4 kHz.

4.3.3.2 Signal assignment.
Signals on the LB interface shall be limited to tones and voice grade audio. The LB interface shall be capable of supporting the transfer of any signal with LB signal characteristics between mission stores and aircraft subsystems.

4.3.4 Release consent interface.
The release consent interface shall be a low power discrete used only to enable, and inhibit, safety critical store functions which are commanded by the aircraft over the data bus interface (see 4.3.2).

CAUTION

The release consent interface is provided to satisfy an aircraft safety function. Consent shall be enabled only when the aircraft determines that safety criteria for store employment sequence have been met.

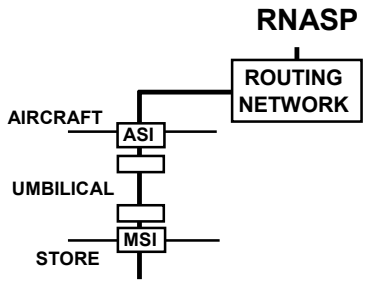

FIGURE 4a. Store to aircraft or aircraft to store direct.

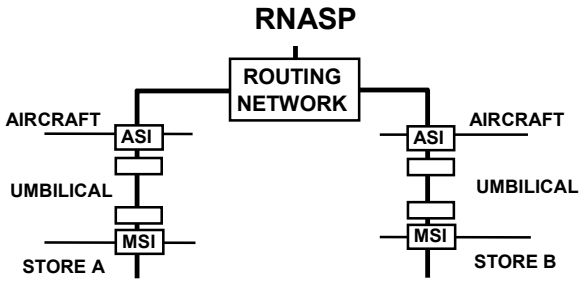

FIGURE 4b. Store to store direct.

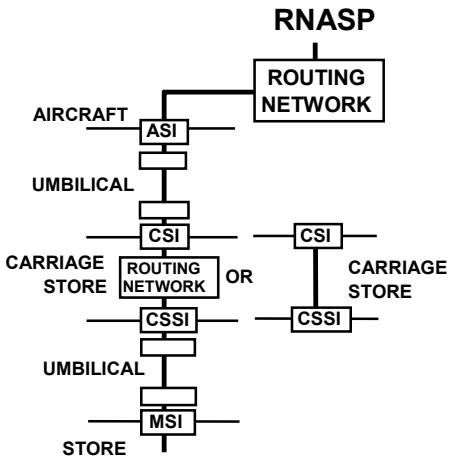

FIGURE 4c. Store to aircraft or aircraft to store via carriage store.

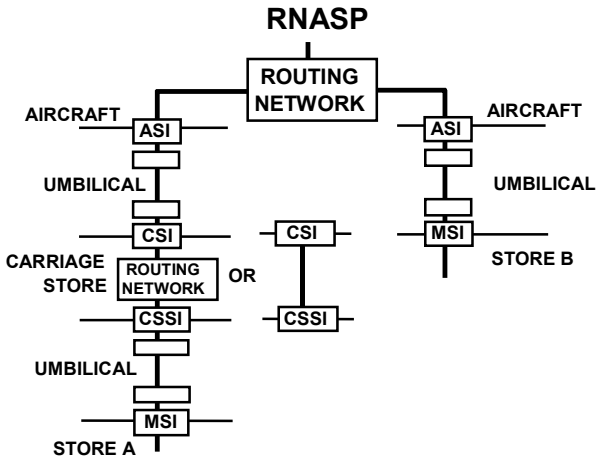

FIGURE 4d. Store A to store B via carriage store.

FIGURE 4. Conceptual HB and LB interface configurations.

(continues on following page)

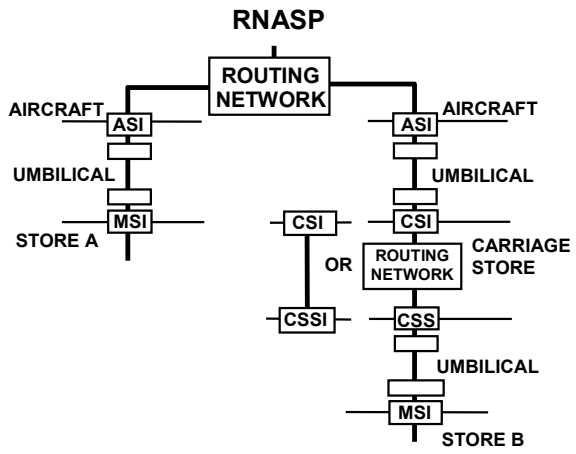

FIGURE 4e. Store A to store B via carriage store.

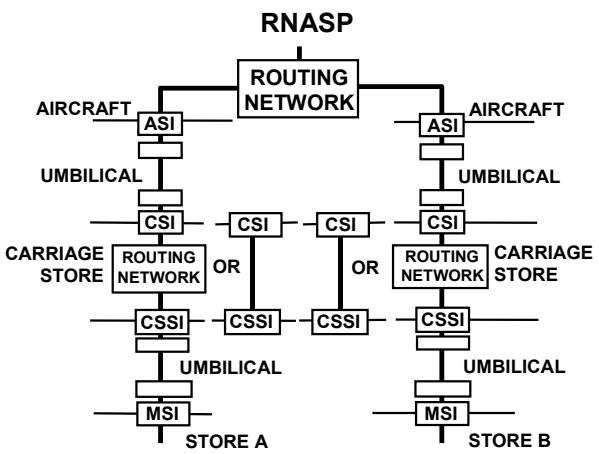

FIGURE 4f. Store to store via carriage stores

FIGURE 4. Conceptual HB and LB interface configurations. (Continued)

4.3.5 Primary interlock interface.
The ASI interlock interface shall be available for the aircraft to monitor the electrically mated status of the primary interface connector between stores and aircraft. The CSSI interlock interface shall be available for the carriage store to monitor the electrically mated status of the primary interface connector between stores and the carriage store.

CAUTION

The interlock interface shall not be used as the sole criterion for functions which could result in an unsafe condition if the interlock circuit fails open.

4.3.6 Address interface.
The address interface shall be used to assign a unique MIL-STD-1553 remote terminal address to the connected store. The address interface shall contain a set of six discretes (five binary weighted address bit discretes A0 through A4 and one parity discrete) and one common address return. Stores may monitor the address discretes to determine the mated status of the connector.

4.3.7 Primary structure ground. [Note 5.]
A dedicated circuit shall be provided between the aircraft and store structure grounds. It shall provide an electrical connection between aircraft and store structures to minimize shock hazards to personnel. The structure ground interface shall not be used as a signal return path or power return path except under fault conditions within the store

4.3.8 Primary power. [Note 6.]
The aircraft shall supply and control all power to stores through the ASI. All ASIs shall provide two 28 V dc sources, and either one 270 V dc source or one source of three-phase, four-wire, wye-connected, 400 Hz, 115/200 V ac. The aircraft may have the capability to supply both 115 V ac and 270 V dc but shall never apply both simultaneously. A dedicated power return shall be provided through the AEIS for each

power source. Stores may use any combination of 28 V dc, 270 V dc and 115/200 V ac power available at the interface. If stores use 115 V ac power, then they shall also be capable of utilizing 270 V dc power in lieu of 115 V ac power. If stores use 270 V dc power, then they shall also be capable of utilizing 115 V ac power in lieu of 270 V dc power. The Store shall not require the application of 115 V ac and 270 V dc simultaneously. The activation of power shall not be used for discrete functions.

4.3.9 Fiber optic (FO) interfaces.
Installation of fiber optics is not required by this standard at this time. Provisions shall be included in Class I interface connectors for two fiber optic interfaces, fiber optic path 1 (FO1) and fiber optic path 2 (FO2). It is anticipated that these interfaces will be used for transferring bi-directional signals between the aircraft and stores within two wavelength windows: nominally 850 nanometer (nm) and 1300 nm.

4.4 Auxiliary power interface signal set.
The auxiliary power signal set, as shown in FIGURE 3, shall include interfaces for aircraft power, structure ground, and interlock discrete. Detailed electrical requirements at the ASI, CSI, CSSI, and MSI shall be in accordance with section 5 herein.

4.4.1 Auxiliary power. [Note 6.]
The aircraft shall supply and control all auxiliary power to stores through the ASI. The auxiliary power interface at an ASI shall include one 28 V dc power source, and either one 270 V dc source or one source of three-phase, four-wire, wye-connected, 400 Hz, 115/200 V ac. The aircraft may have the capability to supply both 115 V ac and 270 V dc but shall never apply both simultaneously. A dedicated power return shall be provided through the AEIS for each power source. Stores may use any combination of 28 V dc, 270 V dc and 115/200 V ac power available at the interface. If stores use 115 V ac power, then they shall also be capable of utilizing 270 V dc power in lieu of that 115 V ac power. If stores use 270 V dc power, then they shall also be capable of utilizing 115 V ac power in lieu of 270 V dc power. The Store shall not require the application of 115 V ac and 270 V dc simultaneously. The activation of power shall not be used for discrete functions.

4.4.2 Auxiliary interlock interface.
An auxiliary ASI interlock interface shall be available for the aircraft to monitor the electrically mated status of the auxiliary power interface connector between stores and aircraft. An auxiliary CSSI interlock interface shall be available for the carriage store to monitor the electrically mated status of the auxiliary power interface connector between stores and carriage stores.

CAUTION

The interlock interface shall not be used as the sole criterion for functions which could result in an unsafe condition if the interlock circuit fails open.

4.4.3 Auxiliary structure ground. [Note 5.]
A dedicated circuit shall be provided between the aircraft and store structure grounds. It shall provide an electrical connection between aircraft and store structures to minimize shock hazards to personnel. The structure ground interface shall not be used as a signal return path or power return path except under fault conditions within the store.

4.5 Interface connectors.
The standard primary interface connector and contact functional assignments of paragraph 5.6.1 shall be used. The standard auxiliary interface connector and contact functional assignment requirements of paragraph 5.6.2 shall be used if the auxiliary power signal set is implemented.

5. DETAILED REQUIREMENTS

5.1 Aircraft requirements.

The aircraft shall meet the following requirements at each ASI. Requirements shall be measurable at the ASI (looking into the aircraft) except where indicated.

5.1.1 Aircraft HB interfaces.

The aircraft shall provide HB interfaces at each ASI for (as a minimum) bi-directional simplex transfer of type A and type B signals. The aircraft shall assign, control, and route HB signals to their proper destinations by means of a HB signal routing network. Each implemented routing network signal path shall meet the following electrical requirements between the RNASP and ASI or between ASIs as applicable. The following requirements cover all four HB interfaces, however, for interface classes II and IIA the requirements associated with HB2 and HB4 do not apply.

5.1.1.1 Minimum transfer capacity.

The aircraft shall support the transfer of one type A signal or one type B signal on HB1, simultaneously with the transfer of type A signals on HB2, HB3, and HB4 through an ASI.

5.1.1.2 Type A signal path requirements.

5.1.1.2.1 Return loss.

The input return loss of each signal path shall not be less than 20 dB over the frequency band 20 Hz to 20 MHz when the output is terminated with the nominal impedance. The output return loss of each signal path shall not be less than 20 dB over the frequency band 20 Hz to 20 MHz when the input is terminated with the nominal impedance.

5.1.1.2.2 Transient response.

The transient response characteristics of each signal path shall meet the following requirements. When each of the signals in FIGURE 5a, FIGURE 6a, FIGURE 7a, and FIGURE 8a is applied to the input, the output signal shall meet the requirements in FIGURE 5b, FIGURE 6b, and FIGURE 8b. For the response envelope in FIGURE 5b, $V'_{1.0}$ is as defined in FIGURE 7b. For the response envelope in FIGURE 6b, $V'_{1.3}$ is defined in FIGURE 8b.

5.1.1.2.3 Insertion gain.

The signal path insertion gain between the input and output shall be 0 dB +0.5/-4.0 dB, where insertion gain = 20 log ($V'_{1.3}$ / V). V and $V'_{1.3}$ are defined in FIGURE 8a and FIGURE 8b respectively.

5.1.1.2.4 Representative pulse delay.

The representative pulse delay of any signal path shall not exceed 2.0 microseconds and shall not vary by more than ±35 nanoseconds from its nominal value. The nominal value of the signal path representative pulse delay for the current routing path configuration shall be retained and made available for computing signal latency. When the signal in FIGURE 8a is applied to the input, the representative pulse delay is the time difference between the voltage V/2 being reached on the input signal rising edge and the voltage $V'_{1.3}$ /2 being reached on the output signal rising edge where $V'_{1.3}$ is defined in FIGURE 8b.

5.1.1.2.5 Equalization.

The gain misequalization of any signal path shall not exceed the limits shown in FIGURE 9. The zero dB gain reference shall be the gain at 20 kHz. The maximum gain between 20 MHz and 200 MHz shall not exceed +3 dB with respect to the zero-dB gain reference.

5.1.1.2.6 Dynamic range.

When a 1 kHz sine wave of peak-to-peak voltage 3.5 V is added to a dc voltage of ±0.5 V and then applied at the signal path input, the signal at the output shall not be compressed or clipped by more than 6 percent.

5.1.1.2.7 Signal path dc offset.
The maximum dc voltage at the output of each signal path shall not exceed ±250 millivolts with the input terminated.

5.1.1.2.8 Noise requirements.
Noise at the type A signal path outputs shall meet the following requirements over the frequency band 20 Hz to 20 MHz.

5.1.1.2.8.1 Random noise.
Using the weighting function of FIGURE 10, the weighted random noise power at each signal path output with the input terminated shall not exceed -45 dBmRMS.

5.1.1.2.8.2 Periodic noise.
The calculated periodic noise voltage at each signal path output with the input terminated shall not exceed 0.8 mVRMS for each valid state of the HB routing network. The noise voltage shall be determined by stimulating each HB and LB interface of the AEIS not associated with the signal path in turn by an in-band, maximum amplitude sinusoidal signal which produces the maximum weighted crosstalk voltage at the signal path output. The weighting function is given in FIGURE 11. The frequency of the stimulus signal may be different at each interface. The calculated periodic noise voltage shall be the root sum of squares of the individual crosstalk voltages plus the unstimulated weighted periodic noise voltage at the signal path output when all HB and LB interfaces are terminated.

5.1.1.2.8.3 Impulse noise.
The peak-to-peak impulse noise voltage at the signal path output with the input terminated shall not exceed 40 mV.

5.1.1.2.8.4 Stimulated noise.
No more than -26 dBm (HB1 and HB2) or -28 dBm (HB3 and HB4) of noise shall be added to the signal path noise at the output when a 1.3 Vpp sinusoidal excitation signal of any frequency between 1 MHz and 15 MHz is applied to the signal path input.

5.1.1.2.8.5 Common mode noise.
Using the weighting function of FIGURE 12, the RMS common mode noise voltage at the output of each signal path shall not exceed 200 mV with respect to the output structure ground when the input is terminated and the input signal return is connected to the input structure ground.

5.1.1.3 Type B signal path requirements.
(None specified at this time)

5.1.1.4 Ground reference.
When a HB interface in an ASI is sending a type A or type B signal, the signal return shall be connected to aircraft structure ground as shown in FIGURE 13a. When a HB interface in an ASI is receiving a type A signal, the signal return shall be isolated from aircraft structure ground as shown in FIGURE 13b. When a HB interface in an ASI is receiving a type B signal, the signal return shall be connected to aircraft structure ground as shown in FIGURE 13c.

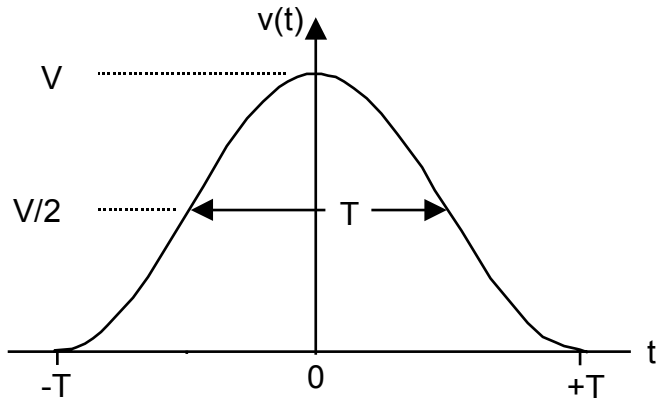

$$v(t) = V \cos^2 \left[\frac{\pi t}{2T} \right] \quad \text{for } -T \leq t < +T$$

$$v(t) = 0 \quad \text{elsewhere}$$

where T = 25 nanoseconds, V = ± 1.0 volt

FIGURE 5a. Cosine-squared T signal. [Note 7.]

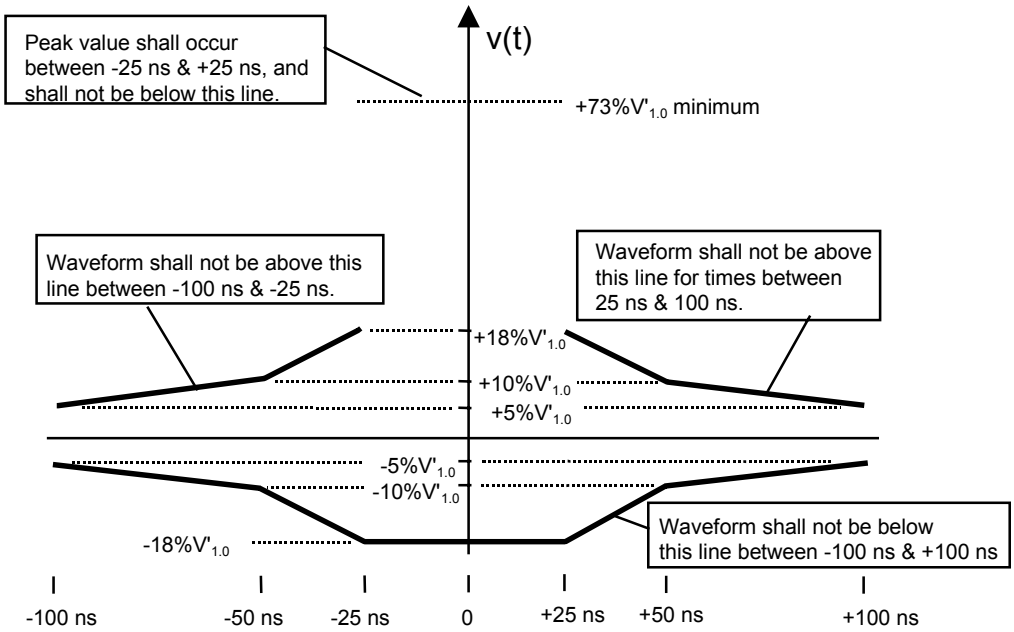

NOTE 1: The time origin (0 ns) for the envelope is arbitrary with respect to both the stimulus and response waveforms

NOTE 2: For sampled systems, the response envelope shall apply to any alignment of the input signal with respect to the sample clock.

FIGURE 5b. Allowed response envelope for cosine-squared T signal. [Note 8.]

FIGURE 5. Cosine-squared T signal requirements.

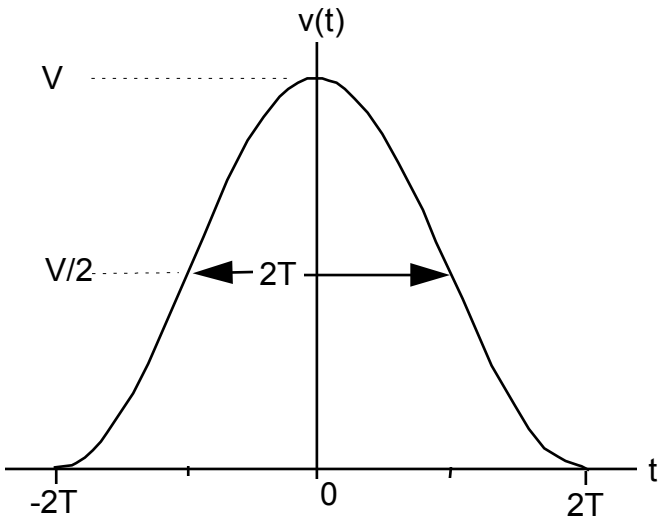

$$v(t) = V \cos^2 \left[\frac{\pi t}{4T} \right] \text{ for } -2T \leq t < 2T$$

$v(t) = 0$ volts elsewhere

where 2T = 50 nanoseconds, V = ± 1.3 volt

FIGURE 6a. Cosine-squared 2T signal. [Note 7.]

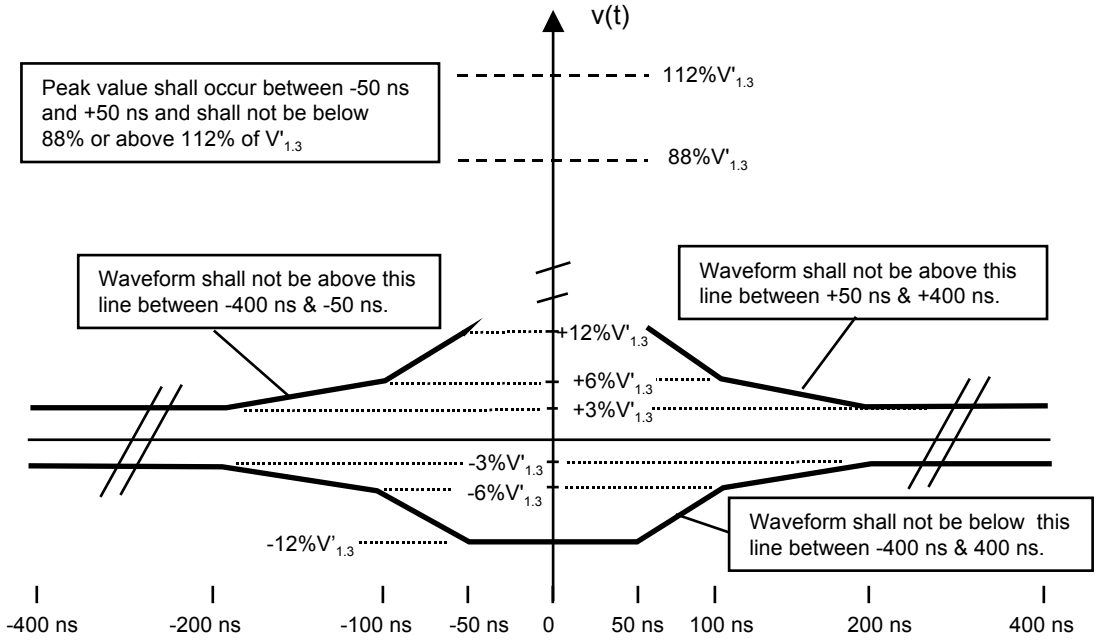

NOTE: The time origin (0 ns) of the envelope is arbitrary with respect to both the stimulus and response waveforms.

FIGURE 6b. Allowed response envelope for cosine-squared 2T signal. [Note 9.]

FIGURE 6. Cosine-squared 2T signal requirements.

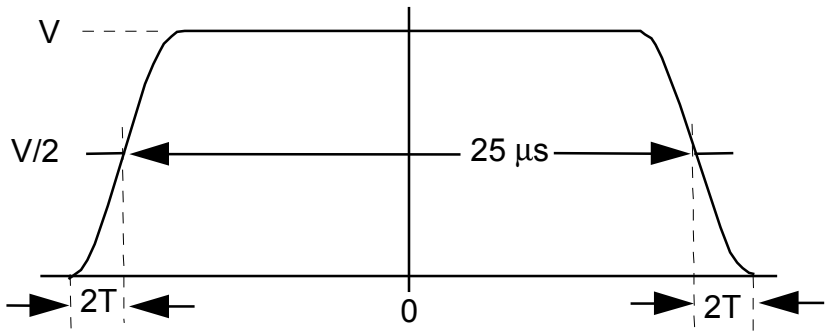

$$v(t) = g(t) * E\left[\frac{t}{25\mu s}\right] \quad \text{where: * denotes convolution}$$

$$g(t) = \frac{V}{2T}\cos^2\left[\frac{\pi t}{4T}\right] \quad \text{for } -2T \le t < 2T$$

$$= 0 \text{ volts elsewhere}$$

$$E\left[\frac{t}{25\mu s}\right] = 1 \text{ for } -12.5\ \mu s \le t < 12.5\ \mu s$$
$$= 0 \text{ elsewhere}$$

where 2T = 50 ns, V = ± 1.0 volt

FIGURE 7a. 2T Bar signal (± 1.0V).

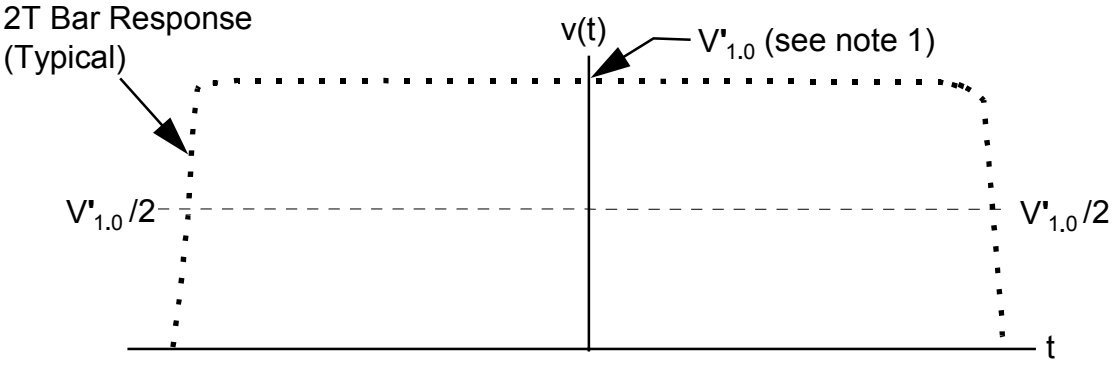

NOTE 1: $V'_{1.0}$ is the value measured at the midpoint between the $V'_{1.0}/2$ points.

FIGURE 7b. Allowed response envelope for 2T Bar signal (referenced to ±1.0V).

FIGURE 7. 2T Bar signal requirements (1.0V).

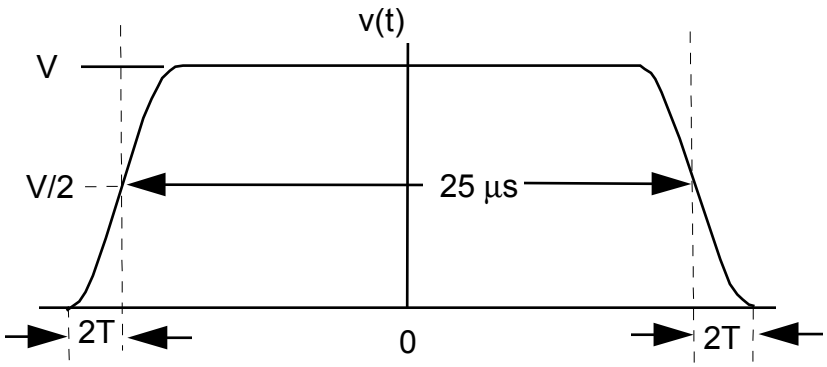

$$v(t) = g(t) * E\left[\frac{t}{25\mu s}\right] \quad \text{(where: * denotes convolution)}$$

$$g(t) \begin{cases} = \dfrac{V}{2T} \cos^2\left[\dfrac{\pi t}{4T}\right] & \text{for } -2T \le t < 2T \\ = 0 \text{ volts elsewhere} \end{cases}$$

$$E\left[\frac{t}{25\mu s}\right] \begin{array}{l} = 1 \text{ for } -12.5\ \mu s \le t < 12.5\ \mu s \\ = 0 \text{ elsewhere} \end{array}$$

where 2T = 50 nanoseconds, V = ± 1.3 volts

FIGURE 8a. 2T Bar signal (± 1.3V).

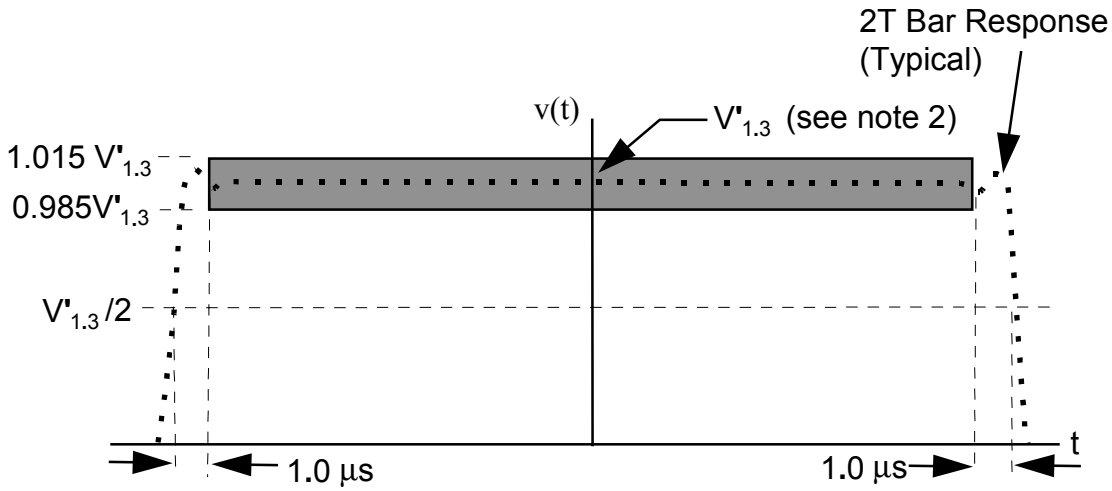

NOTE 1: The exact shape of the 2T Bar Response waveform is not important. The only requirement is that it be within the shaded box.

NOTE 2: $V'_{1.3}$ is the value measured at the midpoint between the $V'_{1.3}/2$ points.

FIGURE 8b. Allowed response envelope for 2T Bar signal (referenced to ±1.3V).

FIGURE 8. 2T Bar signal requirements (1.3V).

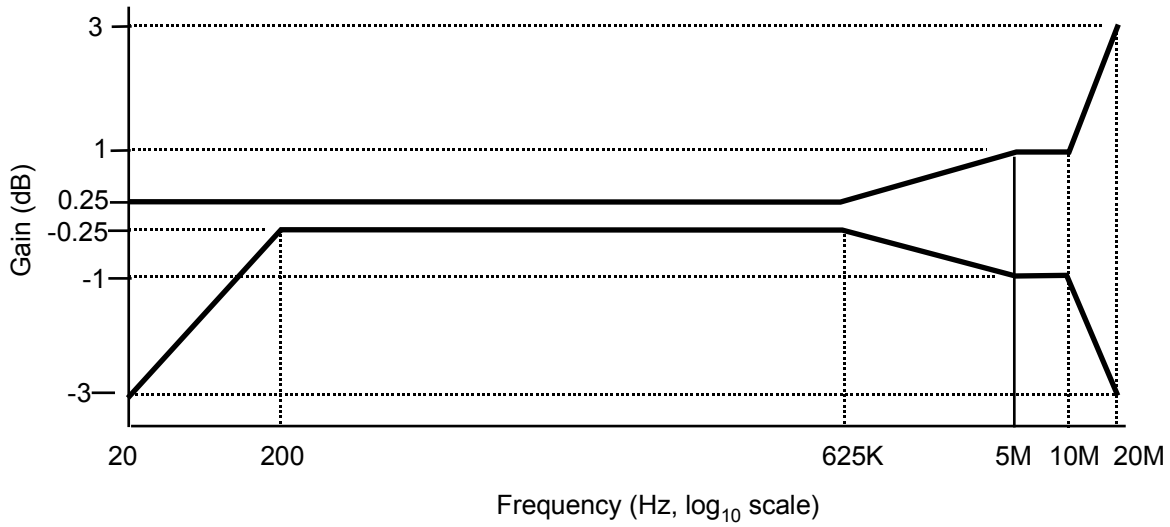

FIGURE 9. Gain misequalization envelope. [Note 10.]

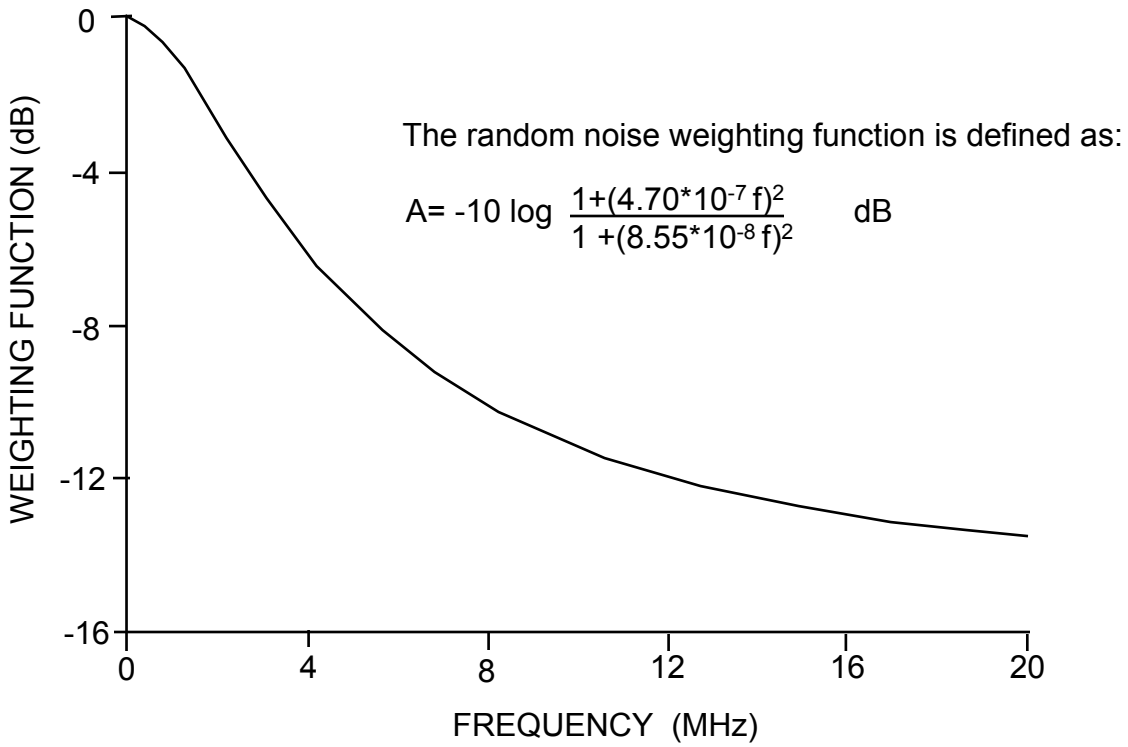

FIGURE 10. Random noise weighting function.

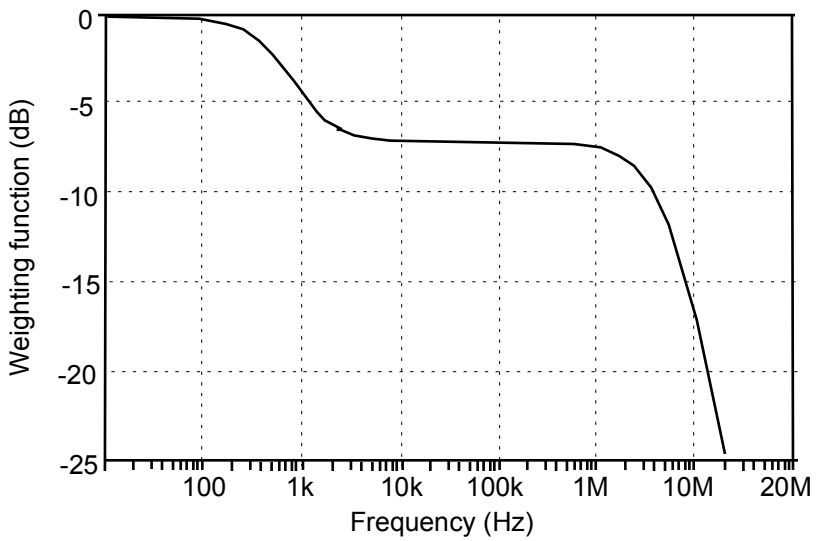

The periodic noise weighting function is defined as:

$$A = 10 \log \left[\frac{1 + \left(\frac{f}{1150\ \text{Hz}} \right)^2}{\left[1 + \left(\frac{f}{500\ \text{Hz}} \right)^2 \right] \left[1 + \left(\frac{f}{4\ \text{MHz}} \right)^2 \right] \left[1 + \left(\frac{f}{20\ \text{MHz}} \right)^2 \right]} \right] \text{dB}$$

FIGURE 11. Periodic noise weighting function.

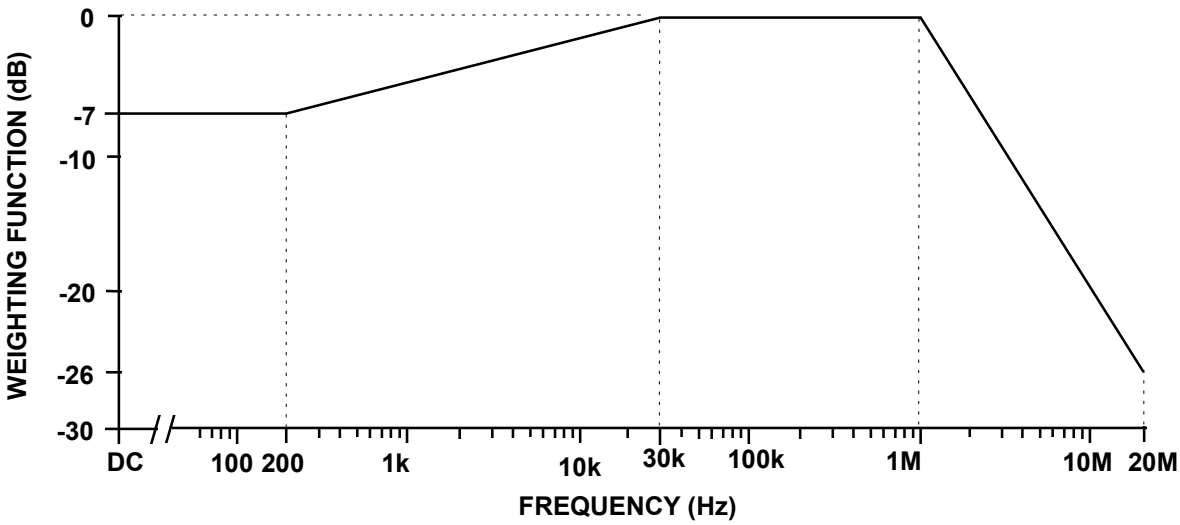

FIGURE 12. Common mode noise weighting function.

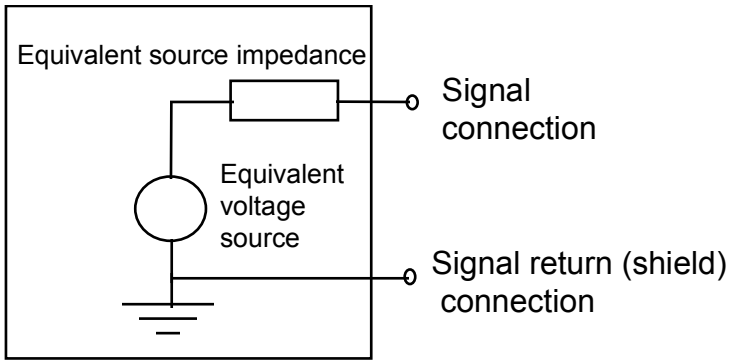

FIGURE 13a. Equivalent circuit of HB interface when sending a Type A or Type B signal.

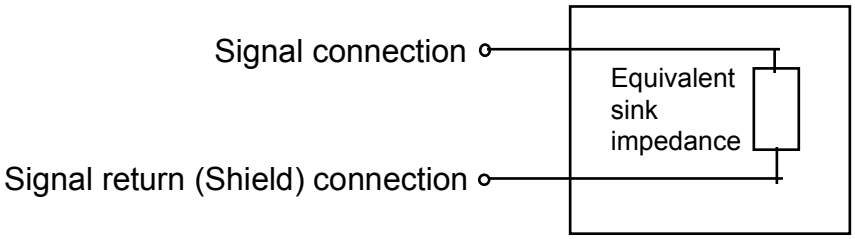

FIGURE 13b. Equivalent circuit of HB interface when receiving a Type A signal.

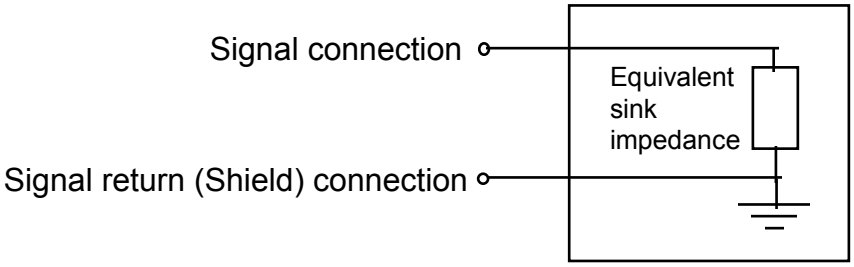

FIGURE 13c. Equivalent circuit of HB interface when receiving a Type B signal.

FIGURE 13. Equivalent circuits of HB interfaces.

5.1.2 Aircraft digital data bus interface.
The aircraft shall provide two data bus interfaces (Mux A and Mux B) at each primary signal set ASI for the transfer of digital messages through the ASI to a MIL-STD-1553 compliant remote terminal in the connected store. Each data bus interface shall contain a data high connection, a data low connection and a shield connection.

5.1.2.1 Functional characteristics.

a. The aircraft shall be responsible for the bus controller function as defined in MIL-STD-1553. The Mux A and Mux B interfaces at each ASI shall be operated in a dual standby redundant mode as described in MIL-STD-1553.

b. The aircraft shall also control digital information transfer from a remote terminal below any ASI to a remote terminal below any other ASIs. The aircraft shall communicate with the remote terminal (connected to an ASI) with:

(1) messages whose terminal address corresponds to the address encoded in the address interface (see 5.1.6) at the ASI, or

(2) MIL-STD-1553 broadcast messages.

c. Subaddress fields of 19 and 27 (10011 and 11011 binary) shall only be used for communications with nuclear stores. This restriction applies to all messages detectable at any ASI.

d. Subaddress 7 (0111 binary) shall only be used for data routing through carriage stores by “peeling.” This restriction applies to all messages detectable at any ASI.

e. The aircraft shall communicate with stores through the Mux A and Mux B interfaces in accordance with the requirements of appendix B.

5.1.2.2 Electrical characteristics.
The aircraft shall comply with the electrical characteristics defined herein at the ASI. The characteristics defined apply when measured on the data high connection referenced to the data low connection. Data high is that connection which is positive referenced to the data low connection in the first part of a MIL-STD-1553 command or status word sync waveform.

5.1.2.2.1 Output characteristics.
The aircraft shall deliver, at each ASI, MIL-STD-1553 compatible digital data waveforms except that the peak-to-peak, line-to-line voltage shall be within the envelope of FIGURE 14. The maximum zero crossing deviation from the ideal (with respect to the previous zero crossing) shall not exceed 120 [Note 11.] nanoseconds.

5.1.2.2.2 Input characteristics.
The aircraft shall receive, and operate with, input signal waveforms at any ASI which comply with the output characteristics of a MIL-STD-1553 transformer coupled stub terminal.

5.1.2.2.3 Shield grounding.
The aircraft shall connect the data bus stub shields of both Mux A and Mux B to aircraft structure ground.

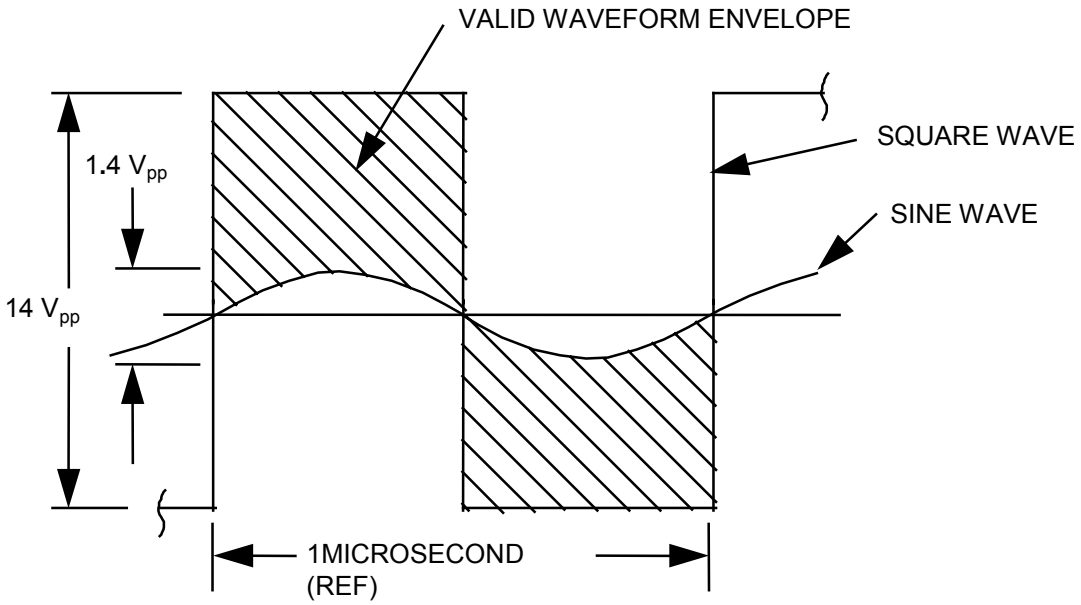

FIGURE 14. ASI output waveform envelope.

5.1.3 Aircraft LB interface.
The aircraft shall provide a LB interface at each ASI for bi-directional simplex transfer of LB signals. The aircraft shall assign, control, and route LB signals to their proper destinations. The following requirements apply to the aircraft network including cables. When connected to source and sink equipment with impedances defined in 4.3.3, LB signal paths shall have the following characteristics.

5.1.3.1 Minimum transfer capacity.
The aircraft shall support the transfer of a LB signal between any ASI and applicable aircraft equipment for applications where the signal source is located in either the aircraft or in the connected store. The aircraft shall be capable of rerouting the signals between aircraft equipment and each ASI. Specific transfer capacity beyond this minimum is not controlled by this standard.

5.1.3.2 Input/output impedance.
The input impedance (line-to-line) of each signal path shall be 600 ohms ±60 ohms, over the frequency band 150 Hz to 8 kHz, when the output is terminated with the nominal sink impedance defined in 4.3.3. The output impedance (line-to-line) of each signal path shall be less than 60 ohms, over the frequency band 150 Hz to 8 kHz, when the input is terminated with the nominal source impedance defined in 4.3.3.

5.1.3.3 Insertion gain.
The signal path insertion gain between the input and output shall be 0 dB +1 dB, -4 dB for a 1 kHz sine wave input.

5.1.3.4 Equalization requirements.
The gain misequalization of any signal path shall not exceed the limits shown in FIGURE 15. The 0 dB reference shall be the gain at 1 kHz.

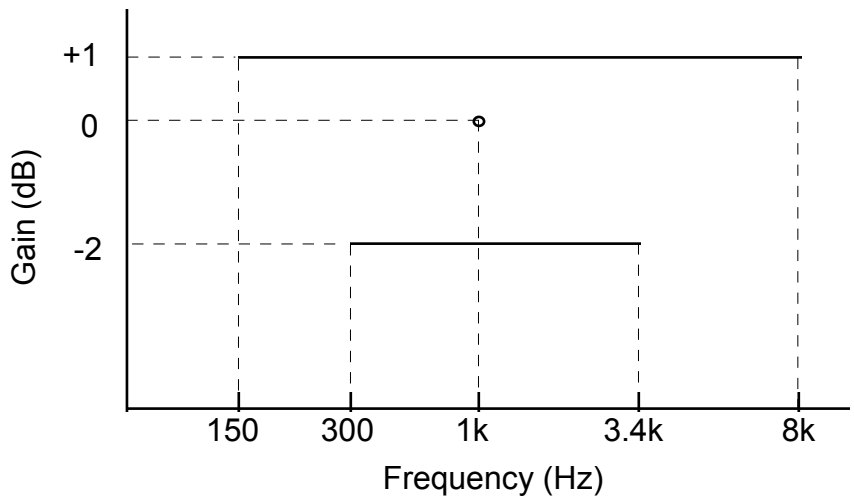

FIGURE 15. Gain misequalization envelope (aircraft, LB).

5.1.3.5 Signal path dc offset.
The maximum dc voltage at the output of each signal path shall not exceed ±1 V line-to-line and ±1 V line-to-ground with the input terminated.

5.1.3.6 Noise.
The signal path noise shall meet the following requirements over the frequency band 150 Hz to 8 kHz except where otherwise specified.

5.1.3.6.1 Periodic and random noise.
The calculated periodic and random noise voltage at each signal path output with the input terminated shall not exceed 12.5 mVRMS for each valid state of the LB routing network. The noise voltage shall be determined by stimulating each LB and HB interface of the AEIS not associated with the signal path in turn by an in-band (150 Hz to 8 kHz), maximum amplitude sinusoidal signal which produces the maximum crosstalk voltage at the signal path output. The frequency of the stimulus signal may be different at each interface. The calculated noise voltage shall be the root sum of squares of the individual crosstalk voltages plus the unstimulated periodic and random noise voltage at the signal path output when all LB and HB interfaces are terminated.

5.1.3.6.2 Impulse noise.
With the input of the signal path terminated, there shall be (to one standard deviation) no more than two occurrences of impulse noise exceeding 20 mV peak over a three minute period. The impulse noise voltage shall apply when band-limited to 8 kHz low pass.

5.1.3.6.3 Stimulated noise.
For any frequency between 300 Hz and 3.4 kHz, application of a 12 Vpp sinusoidal excitation signal to the signal path input shall not add more than 80 mV RMS of noise to the output over the frequency range 150 Hz to 8 kHz.

5.1.3.6.4 Common mode noise.
The peak common mode noise voltage at the output of each signal path shall not exceed ±1 V when the input is terminated and the input shield is at the same potential as the local structure ground. This requirement shall apply over the band 150 Hz to 50 kHz.

5.1.3.7 Ground reference.
When the LB interface in an ASI is sending a signal, the inverting and non-inverting signals shall be referenced to ground as shown in FIGURE 16a. When the LB interface in an ASI is receiving a signal,

the signal shall be represented by the difference between the non-inverting signal and the inverting signal as shown in FIGURE 16b. The shield shall be connected to ground.

Notes: 1. V1-V2 is the Thevenin equivalent voltage source (balanced with respect to ground).

2. R1+R2 is the Thevenin equivalent source impedance.

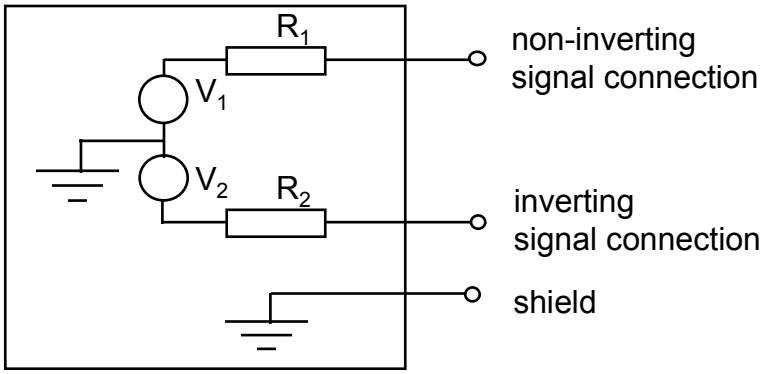

FIGURE 16a. Equivalent circuit of ASI or MSI when sending a LB signal.

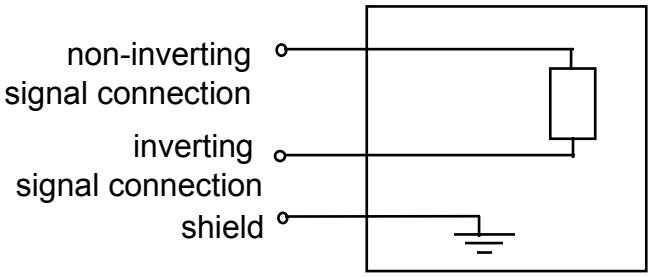

FIGURE 16b. Equivalent circuit of ASI or MSI when receiving a LB signal.

FIGURE 16. Equivalent circuits for LB interfaces.

5.1.4 Aircraft release consent interface.
The aircraft shall provide a release consent interface at each primary signal set ASI for transferring an enable/inhibit signal to the connected store. Release consent, when in the enabled state, shall indicate aircraft consent for stores to perform safety-critical functions (such as store release from a carriage store, missile launch from a rail launcher or rocket firing from a dispenser) when commanded over the data bus interface (see 4.3.4). The aircraft shall require positive crew action to generate the enabled state of the release consent signal. When in the inhibited state, the release consent interface at an ASI shall be electrically isolated from the release consent interface at all other ASIs. The isolation shall be 100 kilohms minimum at dc.

5.1.4.1 Voltage level.
The voltage level measured between the release consent connection and 28 V dc power 2 return connection at the ASI shall be:

a. Steady State Conditions

(1) Enable: Minimum voltage of 19.0 V dc

Maximum voltage, in accordance with MIL-STD-704 for 28 V dc

(2) Inhibit: 1.50 V dc (maximum)

b. Voltage transients shall comply with MIL-STD-704 limits for 28 V dc applications.

5.1.4.2 Current level.
Mission and carriage stores may require 100 milliamperes steady state through the ASI during the enable state and the aircraft shall be able to supply that current. The aircraft is not, however, required to supply any current in excess of 100 milliamperes. The aircraft shall comply with the requirements herein for store imposed load currents of 5.0 milliamperes minimum through the ASI.

5.1.4.3 Stabilization time.
With any resistive load between 320 ohms and 3.8 kilohms connected between release consent and 28 V dc power 2 return, the voltage at the ASI shall reach steady state levels (see 5.1.4.1.a) within 3 milliseconds during transition between enable and inhibit states.

5.1.4.4 Enable lead time.
If release consent is required by a store, the release consent signal shall attain the enable state at least 20 milliseconds prior to transferring the safety critical command over the data bus interface or prior to the firing signal to the parent S&RE, as applicable.

5.1.4.5 Inhibit delay.
If release consent at an ASI has been enabled, the aircraft shall operate under the assumption that the store(s) connected to that ASI may remain in an enable state for up to 20 milliseconds after the release consent signal has been returned to the inhibit state.

5.1.4.6 Ground reference.
The 28 V dc power 2 return connection shall be the ground reference for release consent.

5.1.5 Aircraft interlock interface.
The aircraft shall provide an interlock interface at each primary signal set ASI and auxiliary power signal set ASI for monitoring the mated status of the associated connectors. The interlock interface at each primary and auxiliary ASI consists of an interlock connection and an interlock return connection. If the aircraft monitors the interlock interface, then the aircraft shall comply with the following requirements. These requirements apply to the interlock connection referenced to the interlock return connection.

a. Open circuit voltage

(1) Minimum voltage of 4.0 V dc

(2) Maximum voltage, in accordance with MIL-STD-704 for 28 V dc

(3) Voltage transients shall not exceed the upper limit defined in MIL-STD-704 for 28 V dc

b. Excitation current

(1) Minimum current of 5.0 milliamperes

(2) Maximum current of 100 milliamperes

c. Impedance detection threshold. An interface disconnected condition shall be detected for any impedance level of 100 kilohms or greater. An interface connected condition shall be detected for any impedance level of 2.0 ohms or less. These impedance values apply over the frequency range of dc to 4 kHz.

5.1.6 Aircraft address interface.
The aircraft shall provide an address interface at each primary signal set ASI for assigning a data bus address to the MIL-STD-1553 remote terminal in the store mated to the ASI. Each address interface shall include five binary encoded address bit connections (A_0, A_1, A_2, A_3, and A_4), one address parity connection and one common address return connection. The aircraft shall use this interface only for assigning an address to the remote terminal associated with the directly connected carriage store or mission store.

5.1.6.1 Address assignment.
The aircraft shall supply a logic 0 state or logic 1 state on each of the five binary weighted address bit connections at each ASI. The remote terminal address assigned to an ASI shall be defined as follows:

a. Remote terminal address = $(A_4) \times 2^4 + (A_3) \times 2^3 + (A_2) \times 2^2 + (A_1) \times 2^1 + (A_0) \times 2^0$

b. The aircraft shall supply a logic 0 state or logic 1 state on the address parity connection such that an odd number of logic 1 states exist on the five address bit connections plus the address parity connection.

The aircraft shall not modify the address assigned to an ASI whenever any power (see 5.1.8, 5.1.9, and 5.1.10) is applied to that ASI.

5.1.6.2 Address signal.
The aircraft shall comply with the requirements herein when signals with the following characteristics are applied to the address interface at the ASI by the connected store. The characteristics defined apply to the address bit and parity connections referenced to the address return connection.

a. Open circuit (logic 1) voltage

(1) Minimum voltage of 3.5 V dc

(2) Maximum voltage of 31.5 V dc

(3) Rise and fall times of applied voltage less than 10 milliseconds

b. Logic 0 current

(1) Minimum current of 5.0 milliamperes dc

(2) Maximum current of 100 milliamperes dc through each address bit and parity connection

(3) Maximum current of 600 milliamperes dc through the address return connection

(4) Rise and fall times of applied current less than 10 milliseconds

5.1.6.3 Logic thresholds.
The aircraft shall provide the following logic states under the voltage and current conditions of 5.1.6.2:

a. Logic 1 state characteristics. The aircraft shall maintain sufficient open circuit conditions between each logic 1 set address bit (or parity) connection and the return connection such that when the voltages of 5.1.6.2 are applied across the connections, the current flow shall not exceed 300 microamperes.

b. Logic 0 state characteristics. The aircraft shall limit the voltage drop between each logic 0 set address bit (or parity) connection and return connection at the ASI to 1.0 volts maximum when the current levels specified in 5.1.6.2 are applied. This maximum voltage drop applies when logic 0 states exist at any or all address bit and parity connections.

5.1.6.4 Response characteristics.
The aircraft shall produce valid address characteristics at the ASI within 10 milliseconds of excitation signal application from the store. The aircraft shall not require continuous application of the excitation signal.

5.1.6.5 Address isolation.
The aircraft shall electrically isolate all address connections (including address return) at each ASI from the address connections at all other ASIs, from power returns and from aircraft structure. The isolation shall be 100 kilohms minimum over the frequency range of dc to 4 kHz.

5.1.7 Aircraft structure ground. [Note 12.]
The aircraft shall provide a conductive path from the ASI structure ground interface to aircraft structure, capable of carrying the overcurrent level defined in FIGURE 17 for the primary ASI and FIGURE 18 for the auxiliary ASI. The structure ground interface shall not be used as a signal return path or power return path except under fault conditions within the store. The voltage drop between the ASI structure ground interface and the aircraft ground shall not exceed 0.2 volts when conducting 10 amperes (continuous) for the primary ASI and 30 amperes (continuous) for the auxiliary ASI.

5.1.8 Aircraft 28 V dc power interface.
The aircraft shall provide a set of 28 V dc power interfaces at each ASI. The primary signal set ASI shall contain 28 V dc power 1 (and power 1 return) connections and 28 V dc power 2 (and power 2 return) connections. The auxiliary power signal set ASI shall contain 28 V dc power (and power return) connections.

5.1.8.1 Independent control.
The aircraft shall be capable of sourcing and independently controlling each 28 V dc power interface through each primary signal set ASI and through each auxiliary power signal set ASI.

5.1.8.2 Voltage level. [Note 13.]
The voltages at the ASI between each 28 V dc power connection and the associated power return connection shall comply with the 28 V dc normal and abnormal operation characteristics for utilization equipment defined in MIL-STD-704 with the following addition: the normal steady state lower voltage limit at the ASI shall be 22.0 V dc at any current up to full rated load (10 A for primary, 30 A for auxiliary). Voltage transients at the ASI shall comply with MIL-STD-704.

5.1.8.3 Current capacity.

5.1.8.3.1 Primary signal set.
The aircraft shall be capable of sourcing the maximum load current levels of FIGURE 17a through the 28 V dc power 1 interface and the maximum load current levels of FIGURE 17a through the 28 V dc power 2 interface of the ASI. The aircraft shall be capable of sourcing a total of 20 amperes, continuously through the combination of 28 V dc power 1 and 28 V dc power 2 interfaces of the ASI.

5.1.8.3.2 Auxiliary power signal set.
For interface classes IA and IIA, the aircraft shall be capable of sourcing the maximum load current levels of FIGURE 18a through the 28 V dc power interface of the auxiliary ASI.

5.1.8.3.3 Simultaneous current.
The total 28 V dc current available simultaneously from all ASIs is not controlled by this standard. The total 28 V dc continuous current provided simultaneously through both the primary and auxiliary interfaces at any class IA or IIA ASI need not exceed 30 amperes.

5.1.8.4 Overcurrent protection.
The aircraft shall ensure that the current flow through any 28 V dc power connection does not exceed the maximum overcurrent limits of FIGURE 17 and FIGURE 18 for the primary and auxiliary ASIs, respectively. The aircraft may achieve this current limit operation by the deactivation of the appropriate power interface and any other power interface at the associated ASI.

5.1.8.5 Off-state leakage current.
The off-state leakage current from each 28 V dc power ASI output to its respective return shall not exceed 1.0 milliampere dc with all load impedances. [Note 14.] The off-state leakage current from auxiliary 28 V dc power ASI output to the auxiliary power return shall not exceed 2.50 milliamperes dc with all load impedances.

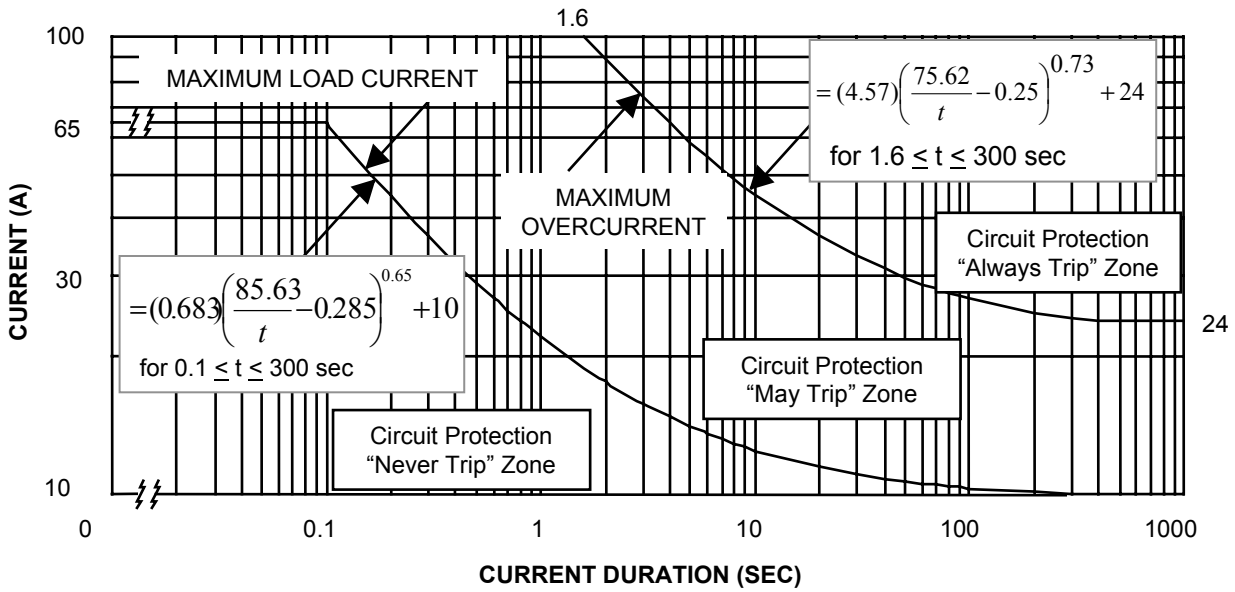

FIGURE 17a. Primary interface current level for 28 V dc and 115/200 V ac power.

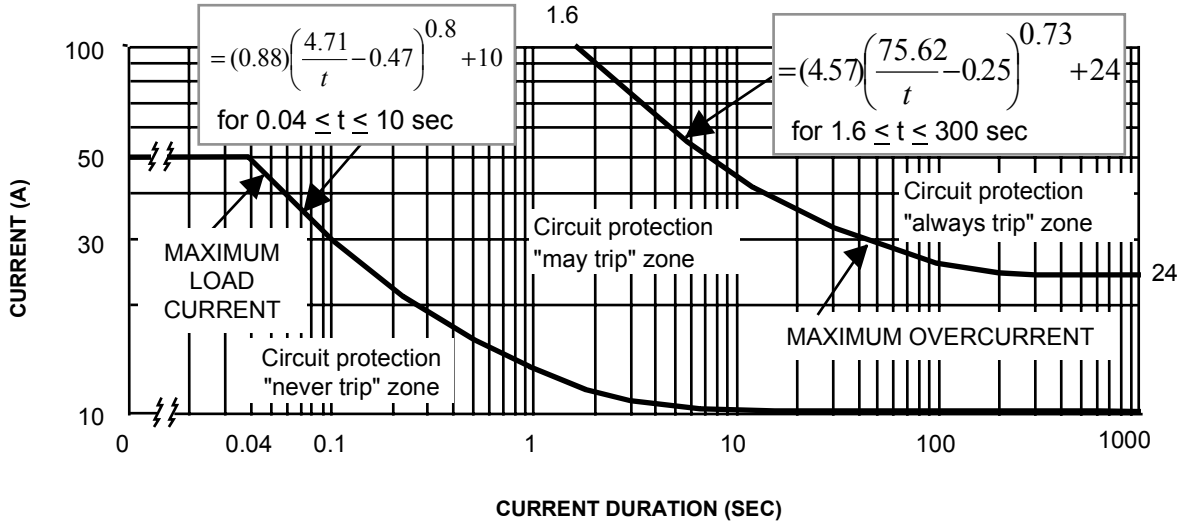

FIGURE 17b. Primary interface current level for 270 V dc power. [Note 16.]

FIGURE 17. Primary interface current level. [Note 15.]

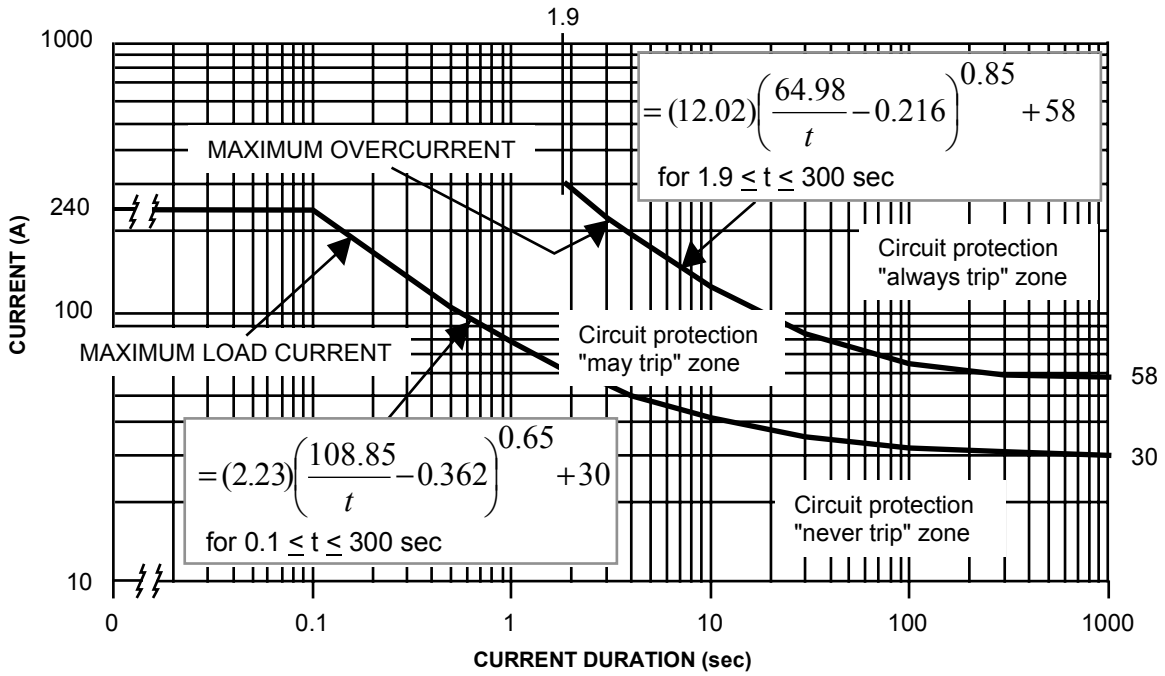

FIGURE 18a. Auxiliary interface current level for 28 V dc and 115/200 V ac power.

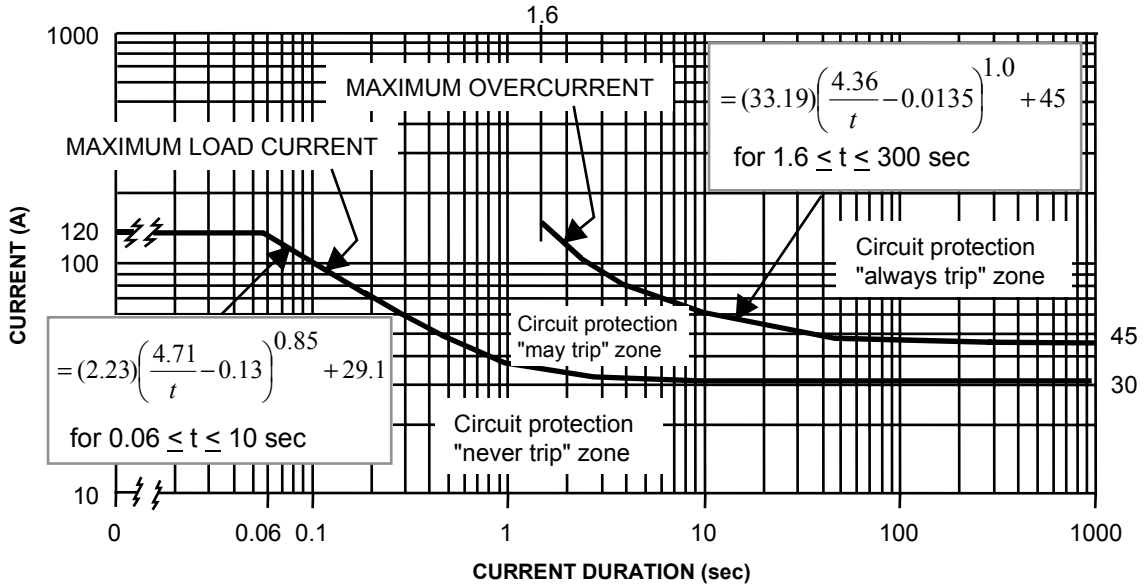

FIGURE 18b. Auxiliary interface current level for 270 V dc power. [Note 16.]

FIGURE 18. Auxiliary interface current level. [Note 15.]

NOTE: The curves of FIGURE 17 and FIGURE 18 define a locus of discrete current-time points (such as 13 amperes for 10 seconds duration) and are not intended to represent a continuous profile of current versus time.

5.1.8.6 Stabilization time.
When tested with a resistive load connected to the ASI, the voltage at the ASI shall reach steady state levels (see 5.1.8.2) within 3.0 milliseconds of power turn-on and turn-off (see FIGURE 19) at any current up to full rated load (10 A for primary, 30 A for auxiliary).

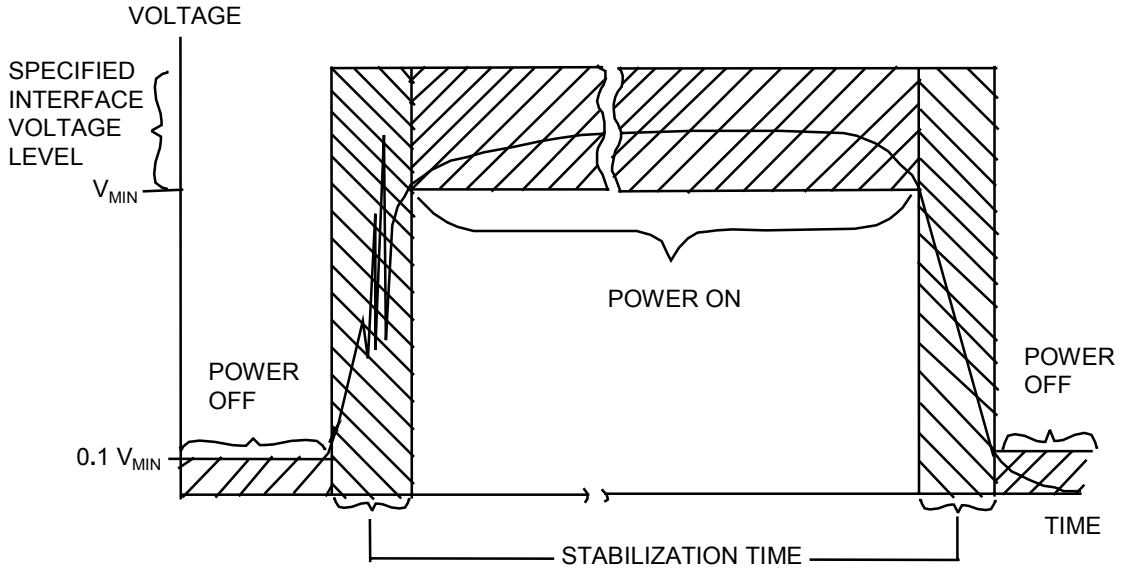

FIGURE 19. Stabilization time.

5.1.8.7 Ground reference.
The 28 V dc power return connections at the primary and auxiliary ASIs shall be the reference for each associated 28 V dc power connection.

5.1.8.8 Power application.
The aircraft shall only energize 28 V dc power 2 and auxiliary 28 V dc when the aircraft has determined that it is safe to do so. The aircraft operation shall consider that some stores may use 28 V dc power 2 or auxiliary 28 V dc for powering safety critical functions such that store safety may be degraded with activation of these power interfaces. The aircraft may energize 28 V dc power 1 at any time under the assumption that all store functions so powered are either not safety critical or that multiple safety interlocks exist within the store such that store safety is not significantly degraded by activation of 28 V dc power 1.

5.1.9 Aircraft 115/200 V ac power interface.
The aircraft shall provide a set of three-phase, four-wire, wye-connected, 115/200 V ac power interfaces at each ASI (see 4.3.8 and 4.4.1). The primary signal set ASI shall contain 115 V ac phase A, phase B, phase C, and neutral connections. The auxiliary power signal set ASI shall contain 115 V ac phase A, phase B, phase C, and neutral connections.

5.1.9.1 Independent control and dead facing.
The aircraft shall be capable of sourcing and independently controlling the 115/200 V ac power interface through each primary interface signal set ASI and through each auxiliary power signal set ASI. The aircraft shall ensure that no ac power is applied to the ASI until an indication is available that the store is mated, such as the interlock circuit is complete. The aircraft shall also ensure that ac power is removed from the ASI prior to store separation or connector disconnect.

5.1.9.2 Voltage level. [Note 13.]
The voltage at the ASI between each 115 V ac phase connection and the associated 115 V ac neutral connection shall comply with the 115 V ac normal and abnormal operation characteristics for utilization equipment defined in MIL-STD-704 with the following addition: the normal steady state lower voltage limit at the ASI shall be 108.0 V RMS at any current up to full rated load (10 A for primary, 30 A for auxiliary). Voltage transients at the ASI shall comply with MIL-STD-704.

5.1.9.3 Current capacity.

5.1.9.3.1 Primary signal set.
The aircraft shall be capable of sourcing the maximum load current levels of FIGURE 17 simultaneously through each of the three 115 V ac phases of the primary signal set ASI.

5.1.9.3.2 Auxiliary power signal set.
For interface classes IA and IIA, the aircraft shall be capable of sourcing the maximum load current levels of FIGURE 18 simultaneously through each of the three 115 V ac power phases of the auxiliary ASI.

5.1.9.3.3 Simultaneous current.
The total 115 V ac current available simultaneously from all ASIs is not controlled by this standard. The total 115 V ac continuous current provided simultaneously through both primary and auxiliary interfaces at any class IA and IIA ASI need not exceed 30 amperes per phase.

5.1.9.4 Overcurrent protection.
The aircraft shall ensure that the current flow through any 115 V ac power phase connection does not exceed the maximum overcurrent limits of FIGURE 17a and FIGURE 18a for the primary and auxiliary ASIs, respectively. The aircraft may achieve this current limit operation by the deactivation of the appropriate power interface and any other power interface at the associated ASI.

5.1.9.5 Off-state leakage current.
The off-state leakage current from each 115 V ac phase output to the associated 115 V ac neutral shall be less than 2.0 milliamperes for the primary signal set ASI and shall be less than 5.0 milliamperes for the auxiliary power signal set ASI with all load impedances. [Note 14.]

5.1.9.6 Stabilization time.
When tested with a resistive load connected to the ASI, the voltage at the ASI shall reach steady state levels within 3.0 milliseconds of power turn-on and turn-off (see FIGURE 19) at any current up to full rated load (10 A for primary, 30 A for auxiliary [Note 14.]).

5.1.9.7 Phase rotation.
The three 115 V ac, 400 Hz, power phases at the ASI shall comply with the phase sequence and voltage phase difference requirements of MIL-STD-704. The power phase assigned to contact location A in the auxiliary ASI connector shall be the identical phase as assigned to contact location P in the primary ASI connector at the same ASI location.

5.1.9.8 Load power factor.
The electrical characteristics at the ASI shall comply with the requirements herein when loads with a power factor within the limits of FIGURE 20 are applied to the ASI.

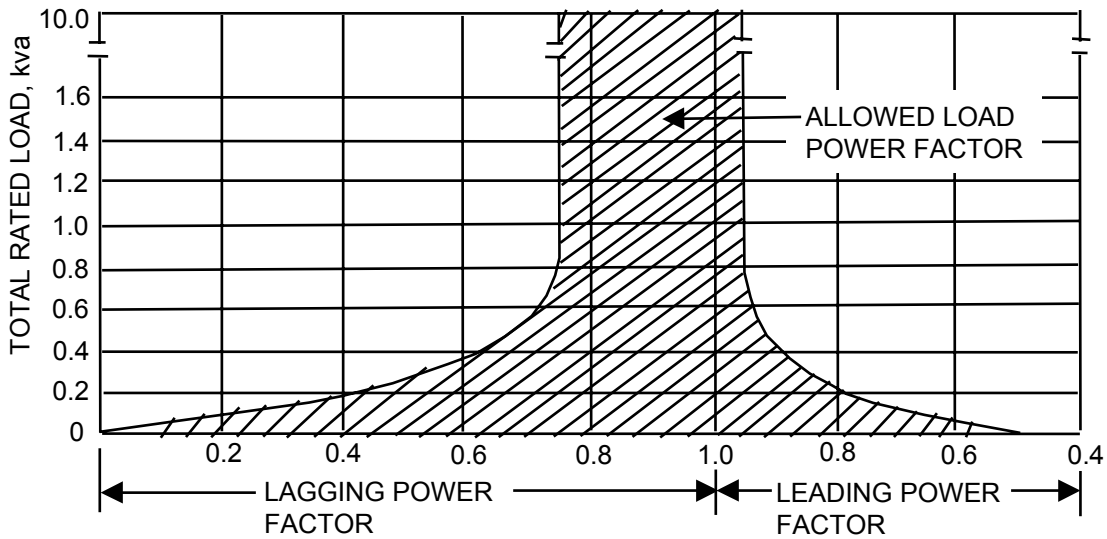

FIGURE 20. Power factor limits.

5.1.9.9 Phase power unbalance.
The electrical characteristics at the ASI shall comply with the requirements herein when loads with a phase power unbalance within the limits of MIL-STD-704 are applied to the ASI.

5.1.9.10 Ground reference.
Each 115 V ac neutral connection in the primary signal set ASI and auxiliary power signal set ASI shall be the reference for its respective 115 V ac power phase.

5.1.9.11 Power application.
The aircraft may energize the 115/200 V ac power interface (primary and auxiliary) at any time under the assumption that all store functions so powered are either not safety critical or that multiple safety interlocks exist within the store such that store safety is not significantly degraded by activation of 115/200 V ac power.

5.1.10 Aircraft 270 V dc power interface. [Note 17.]
The aircraft shall provide a 270 V dc power interface at each ASI (see 4.3.8 and 4.4.1). The primary signal set ASI shall contain 270 V dc and power return connections. The auxiliary power signal set ASI shall contain 270 V dc (and power return) connections. The 270 V dc electrical characteristics shall be as defined in MIL-STD-704E or later revisions for continuous current level up to 10 amps at the primary ASI and up to 30 amps at the auxiliary ASI. .

5.1.10.1 Independent control and dead facing.
The aircraft shall be capable of sourcing and independently controlling each 270 V dc power interface through each primary signal set ASI and through each auxiliary signal set ASI. The aircraft shall ensure that no dc power is applied to the ASI or auxiliary ASI until an indication is available that the store is mated, such as the interlock circuit is complete. The aircraft shall also ensure that dc power is removed from the ASI prior to store separation or connector disconnect.

5.1.10.2 Voltage level.
The voltages at the ASI between each 270 V dc power connection and the associated power return connection shall comply with the 270 V dc normal and abnormal operation characteristics for utilization equipment defined in MIL-STD-704E (or later revisions) with the following addition: the normal steady

state lower voltage limit at the ASI shall be 250.0 V dc at any current up to full rated load (10 A for primary, 30 A for auxiliary). Voltage transients at the ASI shall comply with MIL-STD-704E (or later revisions).

5.1.10.3 Current capacity.

5.1.10.3.1 Primary signal set.
The aircraft shall be capable of sourcing the maximum load current levels of FIGURE 17b through the 270 V dc power interface of the ASI.

5.1.10.3.2 Auxiliary power signal set.
For interface class IA and IIA, the aircraft shall be capable of sourcing the maximum load current levels of FIGURE 18b through the 270 V dc power interface of the auxiliary ASI.

5.1.10.3.3 Simultaneous current.
The total 270 V dc current available simultaneously from all ASIs is not controlled by this standard. The total 270 V dc continuous current provided simultaneously through both the primary and auxiliary interfaces at any class IA and IIA ASI need not exceed 30 amperes.

5.1.10.4 Overcurrent protection.
The aircraft shall ensure that the current flow through any 270 V dc power connection does not exceed the maximum overcurrent limits of FIGURE 17b and FIGURE 18b for the primary and auxiliary ASIs, respectively. The aircraft may achieve this current limit operation by the deactivation of the appropriate power interface and any other power interface at the associated ASI.

5.1.10.5 Off-state leakage current.
The off-state leakage current from each 270 V dc power output to its respective return shall not exceed 2.0 milliampere dc with all load impedances. The off-state leakage current from the auxiliary 270 V dc power output to the auxiliary power return shall not exceed 5.0 milliamperes dc with all load impedances.

5.1.10.6 Stabilization time.
When tested with a resistive load connected to the ASI, the voltage at the ASI shall reach steady state levels within 3.0 milliseconds of power turn-on and turn-off (see FIGURE 19) at any current up to full rated load (10 A for primary, 30 A for auxiliary).

5.1.10.7 Ground reference.
The 270 V dc power return connections at the primary and auxiliary ASIs shall be the reference for each associated 270 V dc power connection.

5.1.10.8 Power application.
The aircraft may energize 270 V dc power (primary and auxiliary) at any time under the assumption that all store functions so powered are either not safety critical or that multiple safety interlocks exist within the store such that store safety is not significantly degraded by activation of 270 V dc power.

5.1.11 Aircraft fiber optic interface.
The two fiber optic interfaces are growth provisions for future applications. The fiber optic interfaces shall not be activated at an ASI until characteristics and performance details are added to this standard. All class I interface connectors at all ASIs shall include two 16 AWG size cavities for fiber optic channel 1 and channel 2. If fiber optic termini are not installed, the connector shall employ plugs that are compatible with an umbilical which is populated with fiber optic termini.

5.1.12 Initialization.
The aircraft shall comply with the following default procedure (in the sequence presented) for initializing stores connected to ASIs. The aircraft may initialize stores using other procedures, provided the aircraft:

a. knows (prior to power application) the identity of the connected store, and

b. has a prior established alternate procedure for safely initializing that store.

5.1.12.1 Pre-initialization conditions.
The aircraft shall provide the following pre-initialization conditions at the ASI:

a. All power interfaces shall be deactivated.

b. Release consent interface shall be in the inhibit state.

c. Address interface shall be set to a valid address.

NOTE: Data bus interface, interlock interface, high bandwidth interfaces, low bandwidth interface and fiber optic interface may be active.

5.1.12.2 Power application. [Note 18.]
The aircraft shall apply primary 28 V dc power 1 and either primary 270 V dc or primary 115/200 V ac power to the ASI within 100 milliseconds of each other but without a required predetermined sequence. The aircraft shall not apply 270 V dc and 115 V ac simultaneously under any non-fault conditions. All other power interfaces at the ASI shall remain deactivated.

5.1.12.3 First communication.
The aircraft shall send to the store (over the data bus interface) transmit command(s) for the store description message as defined in appendix B. The aircraft shall not require a valid store response (see appendix B) to any of these transmit commands if sent within 150 milliseconds after power application per paragraph 5.1.12.2. The aircraft shall not require a "not busy" response (see appendix B) to any of these transmit commands if sent within 500 milliseconds after power application per paragraph 5.1.12.2.

5.2 Mission store requirements (measured at the MSI).
Mission stores shall provide Mission Store Interfaces (MSIs) with the following characteristics.

5.2.1 Mission store HB interfaces.
The mission store is not required to use any HB interface. If a HB interface is used, the mission store shall comply with the requirements below. If a HB interface is not used, the dc resistance between the signal and the signal return connection at the MSI shall be greater than 45 ohms for HB1 and HB2 and greater than 68 ohms for HB3 and HB4. Hierarchical order of selection for type A signal utilization shall be HB1 over HB2 and HB3 over HB4.

5.2.1.2 Electrical characteristics (type A).

5.2.1.2.1 Return loss.
The return loss of the mission store shall not be less than 25 dB over the frequency band 20 Hz to 20 MHz when operating in either sourcing or sinking mode.

5.2.1.2.2 Dynamic range.
When acting as a sink, the mission store shall be compatible with an input voltage within the range of ±3.0 V.

5.2.1.3 Electrical characteristics (type B).
(None specified at this time.)

5.2.1.4 Ground reference.
When a HB interface at an MSI is sending a type A or type B signal, the signal return shall be connected to mission store structure ground as shown in FIGURE 13a. When a HB interface at an MSI is receiving a type A signal, the signal return shall be isolated from ground as shown in FIGURE 13b. When a HB interface at an MSI is receiving a type B signal, the signal return shall be connected to mission store structure ground as shown in FIGURE 13c.

5.2.2 Mission store data bus interface.
The mission store shall provide connections for the data bus interface (Mux A and Mux B) in the primary signal set MSI. Each of the Mux A and Mux B connections shall include a data high, a data low, and a shield connection. The mission store is not required to use the interface. However, if the interface is used, the mission store shall comply with the MSI requirements below. If the interface is not used, the

impedance between the data high and data low connections at the MSI shall be greater than 1000 ohms from 75 kHz to 1.0 MHz.

5.2.2.1 Functional characteristics.

a. The mission store shall provide a remote terminal function as defined in MIL-STD-1553. This remote terminal shall be accessible through the data bus interface (Mux A and Mux B) at the MSI for a dual standby redundant, MIL-STD-1553 communication link with the aircraft or carriage store.

b. The mission store shall respond in accordance with MIL-STD-1553 to those messages whose MIL-STD-1553 command word terminal address corresponds to:

(1) the address encoded on the address interface (see 5.2.6) monitored at the MSI; and

(2) the broadcast address if implemented by the mission store.

c. Subaddress fields of 19 and 27 (10011 and 11011 binary) shall only be used for communications with nuclear stores. This restriction applies to all messages detectable at any MSI.

d. The mission store shall respond to commands received on the Mux A and Mux B interfaces in accordance with the requirements of appendix B.

5.2.2.2 Electrical characteristics.

The mission store shall comply with the electrical characteristics defined herein at the MSI. The characteristics defined apply when measured on the data high connection referenced to the data low connection. Data high is that connection that is positive referenced to the data low connection in the first part of a MIL-STD-1553 command or status sync waveform.

5.2.2.2.1 Output characteristics.

The mission store shall provide output characteristics defined here at the MSI which comply with the output characteristics of a MIL-STD-1553 transformer coupled stub terminal except the terminal output voltage shall be 20.0 V to 27.0 Vpp, line-to-line.

5.2.2.2.2 Input characteristics.

The mission store shall be capable of receiving and operating with input signals at the MSI which comply with the input waveform compatibility, common mode rejection and noise rejection requirements of MIL-STD-1553 for transformer coupled stub terminals. The magnitude of the line-to-line input impedance at the MSI, when the mission store terminal is not transmitting or has power removed, shall be a minimum of 300 ohms within the frequency range of 75 kHz to 1.0 MHz. The remote terminal contained within the mission store shall comply with the 1000 ohm minimum terminal input impedance required by MIL-STD-1553.

5.2.2.2.3 Shield grounding.

The mission store shall connect the data bus stub shields of both Mux A and Mux B to a mission store structure ground.

5.2.3 Mission store LB interface.

The LB interface shall include a non-inverting, an inverting, and a shield connection. The mission store is not required to use the LB interface. However, if the LB interface is used, the mission store shall comply with the requirements below. If the LB interface is not used, the impedance between the non-inverting and the inverting connections at the MSI shall be greater than 540 ohms. The mission store may provide the signal source or signal sink as applicable.

5.2.3.1 Input/output impedance.

When the LB interface in the MSI is acting as a source, it shall have a total source impedance not exceeding 60 ohms. When the LB interface in the MSI is acting as a sink, input impedance shall be 600 ±60 ohms. These requirements apply over the frequency band 150 Hz to 8 kHz.

5.2.3.2 Ground reference.

When the LB interface in an MSI is acting as a source, the inverting and non-inverting signals shall be referenced to ground as shown in FIGURE 16a. When the LB interface in an MSI is acting as a sink, the

signal shall be represented by the difference between the non-inverting signal and the inverting signal as shown in FIGURE 16b. The shield shall be connected to mission store ground.

5.2.4 Mission store release consent interface.
The mission store shall provide connections for a release consent interface in the primary signal set MSI. The mission store shall use the release consent interface if the Commit to Separate Store or Submunition function (bit D_8) or the Fire, Launch or Release function (bit D_{10}) of the Critical Control 1 data word in the Mission Store Control message (see appendix B) is implemented. The store shall act on these safety critical commands received over the data bus interface only if the release consent signal is in the enabled state.The mission store is not required to use the release consent interface in other instances. However, if the release consent interface is used, the mission store shall comply with the requirements below. If the release consent is not used, the impedance between the release consent connection and the 28 V dc power 2 return connection shall be greater than 100 kilohms (at dc).

CAUTION

The release consent interface is provided to satisfy an aircraft safety function. Consent is enabled whenever the aircraft determines that safety criteria for store employment sequence have been met.

5.2.4.1 Voltage level.
The mission store shall establish the appropriate enable or inhibit state when the following voltage levels are applied to the release consent connection (referenced to the 28 V dc power 2 return connection) at the MSI:

a. Steady-state conditions:

   Enable: Minimum voltage of 15.0 V dc
   Maximum voltage as defined in MIL-STD-704 for 28 V dc

   Inhibit: 1.50 V dc (maximum applied)

b. Voltage transients up to the limits of MIL-STD-704 for 28 V dc applications.

5.2.4.2 Current level.
The mission store shall limit the load current to a range of 5.0 to 100 milliamperes when the steady state enable voltages (see 5.2.4.1a) are applied to the MSI.

5.2.4.3 Stabilization time.
The mission store shall be compatible with aircraft and carriage stores which deliver a signal to the MSI with a transition time (between enable and inhibit states) of up to 6.0 milliseconds.

5.2.4.4 Enable lead time.
The mission store shall be capable of accepting safety critical commands over the data bus interface within 10 milliseconds after a valid enable signal is applied to the MSI.

5.2.4.5 Inhibit lead time.
The mission store shall functionally reject any safety critical commands over the data bus interface within 10 milliseconds after a valid inhibit signal is applied to the MSI.

5.2.4.6 Ground reference.
The 28 V dc power 2 return connection at the MSI shall be the ground reference for the release consent signal.

5.2.5 Mission store interlock interface.
The mission store shall provide connections for an interlock interface in the primary signal set MSI (primary MSI) and in the auxiliary power signal set MSI (auxiliary MSI). The interlock interface at both the primary and auxiliary MSI shall include an interlock connection and an interlock return connection. The path between the interlock and interlock return at the primary and auxiliary connectors shall have an impedance of 500 milliohms maximum over the frequency range of dc to 4 kHz when measured at the MSI. This impedance applies for excitation current within the range of 5.0 to 100 milliamperes. The excitation current from the connected aircraft or carriage store may be continuously applied or periodically pulsed. The mission store shall comply with the requirements herein when the excitation signal open circuit voltage applied to the MSI is between 3.5 V dc and MIL-STD-704 28 V dc upper voltage limits. The mission store shall electrically isolate both the interlock and interlock return connections at the MSI from all mission store circuits and grounds. The isolation shall be 100 kilohms minimum over the frequency range of dc to 4 kHz.

5.2.6 Mission store address interface.
The mission store shall include connections for an address interface in the primary signal set MSI for detecting the assigned store data bus address. If the mission store needs to determine the mated status of the MSI, it shall also use the address interface for this purpose. The address interface shall include five binary encoded address bit connections (A_0, A_1, A_2, A_3, and A_4), one address parity connection and one common address return connection. The characteristics defined below shall apply to the address bit and parity connections when referenced to the address return connection. Mission stores which implement the data bus interface (5.2.2) shall energize the address interface at the MSI to monitor the data bus address assigned to the mission store by the connected aircraft or carriage store. Mission stores which do not implement the data bus interface are not required to use the address interface.

5.2.6.1 Address assignment.

a. The mission store shall monitor the five binary encoded address bit connections at the MSI for logic 0 and logic 1 states. The remote terminal address assigned to the MSI shall be defined as follows:
Remote terminal address = $(A_4) \times 2^4 + (A_3) \times 2^3 + (A_2) \times 2^2 + (A_1) \times 2^1 + (A_0) \times 2^0$

b. The mission store shall monitor the address parity connection at the MSI for logic 0 and logic 1 states. The mission store shall accept the assigned address as a valid remote terminal address if the address parity connection logic state indicates odd parity. Odd parity is defined as an odd number of logic 1 states on the six-bit set composed of the five address bit connections plus the address parity connection. The mission store shall, as a minimum, determine its assigned address during the initialization sequence of 5.2.12.

5.2.6.2 Address signal.
The mission store shall provide excitation signals with the following characteristics:

a. Open circuit (logic 1) voltage:

(1) Minimum voltage of 4.0 V dc

(2) Maximum voltage of 31.5 V dc

(3) Rise and fall times of applied voltage shall not exceed 10 milliseconds when measured with a resistive load.

b. Logic 0 current:

(1) Minimum current of 5.0 milliamperes dc

(2) Maximum current of 100 milliamperes through each address bit and parity connection

(3) Maximum current of 600 milliamperes through the address return connection

(4) Rise and fall times of applied current shall not exceed 10 milliseconds when measured with a resistive load.

5.2.6.3 Logic threshold.
The mission store shall detect logic 0 and logic 1 states under the following conditions. The logic state detection conditions apply to all valid and invalid address assignment combinations.

a. Logic 1: Any current level of 300 microamperes or less out of any address bit or address parity connection when the excitation voltage of 5.2.6.2 is applied by the store shall be interpreted as a logic 1 state.

b. Logic 0: Any voltage level of 1.50 V or less between any address bit (or parity) connection and the address return connection when the excitation current of 5.2.6.2 is sourced by the store shall be interpreted as a logic 0 state.

5.2.6.4 Response characteristics.
The store shall allow 10 milliseconds minimum for logic state stabilization after application of the excitation signal.

5.2.7 Mission store structure ground. [Note 19.]
The mission store shall provide a conductive path from the MSI structure ground to mission store structure, capable of carrying the overcurrent level defined in FIGURE 17 for the primary MSI interface and FIGURE 18 for the auxiliary MSI. The structure ground interface shall not be used as a signal return path or power return path except under fault conditions within the mission store. The voltage drop between the MSI structure ground interface and the mission store ground shall not exceed 0.2 volts when conducting 10 amperes (continuous) for the primary MSI and 30 amperes (continuous) for the auxiliary MSI.

5.2.8 Mission store 28 V dc power interface.
The mission store shall provide connections for the 28 V dc power interface in the primary signal set MSI (primary MSI) and in the auxiliary power signal set MSI (auxiliary MSI). The primary MSI shall contain 28 V dc power 1 and power 1 return connections and 28 V dc power 2 and power 2 return connections. The auxiliary MSI shall contain a 28 V dc power connection and a 28 V dc power return connection. The mission store is not required to use any of the 28 V dc power interfaces. However, if any 28 V dc power interface is used, the mission store shall comply with the MSI requirements below. If any 28 V dc power interface is not used, the impedance between the unused power connection and the associated return connection at the MSI shall be greater than 100 kilohms (at dc).

5.2.8.1 Voltage level.
The mission store shall be compatible with MSI voltages which comply with the 28 V dc normal and abnormal characteristics and voltage transients for utilization equipment defined in MIL-STD-704 with the following addition. The mission store shall be compatible with a normal steady state lower voltage limit of 20.0 V dc.

5.2.8.2 Load current.
The mission store shall comply with the following load current requirements when the MSI voltage is within the range of 20.0 V dc to 29.0 V dc.

5.2.8.2.1 Primary signal set.
Under fault free conditions, the mission store load applied at the primary MSI to each of the 28 V dc power 1 and 28 V dc power 2 connections shall not exceed the maximum load current level of FIGURE 17.

5.2.8.2.2 Auxiliary power signal set.
Under fault free conditions, the mission store load applied at the auxiliary MSI shall not exceed the maximum load current level of FIGURE 18.

5.2.8.2.3 Simultaneous load.
Under fault free conditions, mission stores with a class IA or IIA MSI shall limit the total simultaneous current on all 28 V dc power interfaces in the primary and auxiliary MSI to the maximum load current level of FIGURE 18.

5.2.8.3 Load isolation.
The mission store shall provide a minimum isolation of 100 kilohms (at dc) between the primary MSI 28 V dc power 1 connection, the primary MSI 28 V dc power 2 connection and the auxiliary MSI 28 V dc power connection. The mission store may provide continuity between the associated 28 V dc power return connections.

5.2.8.4 Overcurrent compatibility.
The mission store shall not become unsafe if fault currents up to the maximum overcurrent levels of FIGURE 17 and FIGURE 18 are sourced into the primary and auxiliary MSIs, respectively.

5.2.8.5 Off-state leakage current.
The mission store shall be compatible with off-state leakage currents supplied to the primary MSI up to 1.0 milliampere dc between each 28 V dc power and its respective return. The mission store shall be compatible with off-state leakage currents supplied to the auxiliary MSI up to 2.50 milliamperes dc between auxiliary 28 V dc power and the associated 28 V dc power return.

5.2.8.6 Stabilization time.
The mission store shall be compatible with MSI voltages which are below the levels of 5.2.8.1 herein for up to 6.0 milliseconds during power turn-on and turn-off (see FIGURE 19).

5.2.8.7 Ground reference.
The 28 V dc power return connections at the primary and auxiliary MSIs shall be the reference for each associated 28 V dc power connection. The mission store shall be compatible with aircraft and carriage stores which connect the 28 V dc returns to aircraft structure ground. The mission store shall also be compatible with aircraft and carriage stores which isolate the 28 V dc returns from aircraft structure grounds.

5.2.8.8 Power utilization.
Mission stores shall use 28 V dc power 2 or auxiliary 28 V dc to power those safety critical functions for which insufficient interlocks exist in the store for assuring that the required level of store safety can be achieved once the associated power interface is activated. The store shall not execute any safety critical functions (e.g., arm or employ) solely as a result of the activation of 28 V dc power 2 or auxiliary 28 V dc power. Mission stores may use 28 V dc power 2 or auxiliary 28 V dc for powering non-safety critical store functions with the understanding that the aircraft will not energize these power interfaces until the aircraft has determined that it is safe to do so. Mission stores shall use 28 V dc power 1 only for powering those store functions which are not safety critical or which have sufficient safety interlocks such that store safety is not significantly degraded with the activation of 28 V dc power 1. Mission stores shall withstand without functional damage, the activation of any 28 V dc power interfaces prior to needed activation.

5.2.9 Mission store 115/200 V ac power interface.
The mission store shall provide connections for the 115/200 V ac power interface in the primary signal set MSI (primary MSI) and in the auxiliary power signal set MSI (auxiliary MSI). Both the primary MSI and auxiliary MSI shall contain 115 V ac phase A, phase B, phase C, and neutral connections. The mission store is not required to use any of the 115 V ac phases (see 4.3.8 and 4.4.1). However, if any 115 V ac phase is used, the mission store shall comply with the MSI requirements below. If any 115 V ac phase is not used, the impedance between the unused phase connection and the associated neutral connection at the MSI shall be greater than 100 kilohms (at 400 Hz). The mission store shall not require the presence of ac power at the MSI during actual store separation from the aircraft or carriage store, or during connector disconnect.

5.2.9.1 Voltage level.
The mission store shall be compatible with MSI voltages which comply with the 115 V ac normal and abnormal characteristics and voltage transients for utilization equipment defined in MIL-STD-704 with the following addition. The mission store shall be compatible with a normal steady state lower voltage limit of 105.0 V RMS.

5.2.9.2 Load current.
The mission store shall comply with the following load current requirements when the MSI voltage is within the range of 105 and 118 volts RMS.

5.2.9.2.1 Primary signal set.
Under fault free conditions, the mission store load applied at the MSI to each 115 V ac phase connection shall not exceed the maximum load current level of FIGURE 17a. Mission stores designed for operation through carriage stores shall limit the phase load at the MSI to 90 percent of the maximum load current level of FIGURE 17a.

5.2.9.2.2 Auxiliary power signal set.
Under fault free conditions, the mission store load applied at the MSI to each 115 V ac phase connection shall not exceed the maximum load current level of FIGURE 18a.

5.2.9.2.3 Simultaneous load.
Under fault free conditions, mission stores with a class IA or IIA MSI shall limit the total simultaneous per phase current on all 115 V ac phase connections in the primary MSI and auxiliary MSI to the maximum load current level of FIGURE 18a. Mission stores designed for operation through carriage stores, shall not exceed a 29 ampere continuous per phase load.

5.2.9.3 Load isolation. [Note 20.]
The mission store shall provide a minimum isolation of 100 kilohms (at 400 Hz) between the primary MSI 115 V ac phase connections and the auxiliary MSI 115 V ac phase connections.

5.2.9.4 Overcurrent compatibility.
The mission store shall not become unsafe if fault currents up to the maximum overcurrent levels of FIGURE 17a and FIGURE 18a are sourced into the primary and auxiliary MSI, respectively.

5.2.9.5 Off-state leakage current.
The mission store shall be compatible with off-state leakage currents applied to the primary MSI up to 2.0 milliamperes between each 115 V ac power phase and the 115 V ac neutral. The mission store shall be compatible with off-state leakage currents supplied to the auxiliary MSI up to 5.0 milliamperes between each auxiliary 115 V ac power phase and the associated 115 V ac neutral.

5.2.9.6 Stabilization time.
The mission store shall be compatible with MSI voltages which are below the levels of 5.2.9.1 herein for up to 6.0 milliseconds during power turn-on and turn-off (see FIGURE 19).

5.2.9.7 Load power factor.
The mission store load for each phase at the MSI shall have a power factor within the limits of FIGURE 20.

5.2.9.8 Phase unbalance.
The mission store load at the MSI shall comply with the ac phase power utilization requirements of MIL-STD-704.

5.2.9.9 Ground reference. [Note 21.]
The 115 V ac neutral connections in the primary and auxiliary MSIs shall be the reference for each associated 115 V ac phase connection. The 115 V ac neutral connections shall be isolated from each other and from structure ground to a minimum impedance of 100 kilohms (at 400 Hz). Stores shall be compatible with aircraft which connect the 115 V ac neutrals to aircraft structure grounds.

5.2.9.10 Power utilization.
Mission stores shall use 115/200 V ac power (primary and auxiliary) only for powering those store functions which are not safety critical or which have sufficient safety interlocks such that store safety is not significantly degraded with the activation of 115/200 V ac. The mission store shall withstand without damage, the activation or loss of any 115 V ac power phase at any time.

5.2.10 Mission store 270 V dc power interface. [Note 17.]
The mission store shall provide connections for the 270 V dc power interface in the primary signal set MSI (primary MSI) and in the auxiliary power signal set MSI (auxiliary MSI). The primary MSI shall contain 270 V dc power and power return connections. The auxiliary MSI shall contain 270 V dc power and power return connections. The mission store is not required to use any of the 270 V dc power interfaces (see 4.3.8 and 4.4.1). However, if any 270 V dc power interface is used, the mission store shall comply with the MSI requirements below. If the 270 V dc power interface is not used, the impedance between the unused power connection and the associated return connection at the MSI shall be greater than 100 kilohms (at dc). The mission store shall not require the presence of 270 V dc power at the MSI during actual store separation from the aircraft or carriage store, or during connector disconnect.

5.2.10.1 Voltage level.
The mission store shall be compatible with MSI voltages which comply with the 270 V dc normal and abnormal characteristics and voltage transients for utilization equipment defined in MIL-STD-704E or later revisions with the following addition. The mission store shall be compatible with a normal steady state lower voltage limit of 247.0 V dc.

5.2.10.2 Load current.
The mission store shall comply with the following load current requirements when the MSI voltage is within the range of 247.0 V dc to 280.0 V dc.

5.2.10.2.1 Primary signal set.
Under fault free conditions, the mission store load applied at the primary MSI to the 270 V dc power connection shall not exceed the maximum load current level of FIGURE 17b. Mission stores designed for operation through carriage stores shall limit the load at the MSI to 90 percent of the maximum load current level of FIGURE 17b.

5.2.10.2.2 Auxiliary power signal set.
Under fault free conditions, the mission store load applied at the auxiliary MSI shall not exceed the maximum load current level of FIGURE 18b.

5.2.10.2.3 Simultaneous load.
Under fault free conditions, mission stores with a class IA or class IIA MSI shall limit the total simultaneous current on all 270 V dc power interfaces in the primary and auxiliary MSI to the maximum load current level of FIGURE 18b.

5.2.10.3 Load isolation.
The mission store shall provide a minimum isolation of 100 kilohms (at dc) between the primary MSI 270 V dc power connection and the auxiliary MSI 270 V dc power connection.

5.2.10.4 Overcurrent compatibility.
The mission store shall not become unsafe if fault currents up to the maximum overcurrent levels of FIGURE 17b and FIGURE 18b are sourced into the primary and auxiliary MSIs, respectively.

5.2.10.5 Off-state leakage current.
The mission store shall be compatible with off-state leakage currents supplied to the primary MSI up to 2.0 milliampere dc between each 270 V dc power connection and its return. The mission store shall be compatible with off-state leakage currents supplied to the auxiliary MSI up to 5.0 milliamperes dc between auxiliary 270 V dc power connection and the associated 270 V dc power return.

5.2.10.6 Stabilization time.
The mission store shall be compatible with MSI voltages which are below the levels of 5.2.10.1 herein for up to 6.0 milliseconds during power turn-on and turn-off (see FIGURE 19).

5.2.10.7 Ground reference.
The 270 V dc power return connection at the primary and auxiliary MSIs shall be the reference for each associated 270 V dc power connection. The 270 V dc return connections shall be isolated from each other and from structure ground to a minimum impedance of 100 kilohms. The mission store shall be

compatible with aircraft and carriage stores which connect the 270 V dc returns to aircraft structure ground. The mission store shall also be compatible with aircraft and carriage stores which isolate the 270 V dc returns from aircraft structure ground.

5.2.10.8 Power utilization.
Mission stores shall use 270 V dc power (primary and auxiliary) only for powering those store functions which are not safety critical or which have sufficient safety interlocks such that store safety is not significantly degraded with the activation of 270 V dc. The mission store shall withstand without damage, the activation or loss of 270 V dc power at any time.

5.2.11 Mission store fiber optic interface.
If a store uses fiber optic interfaces, the fiber optic interfaces shall comply with the requirements specified in 5.1.11 and subparagraphs. Use of the fiber optic interfaces by a mission store shall not occur until the optical and logical (protocol) characteristics of the fiber optic interfaces are added to this standard. If fiber optic interfaces are not used, the connector shall employ plugs that are compatible with an umbilical which is populated with fiber optic termini.

5.2.12 Store initialization.
Stores shall comply with the following initialization requirements in the sequence presented.

5.2.12.1 Pre-initialization conditions.
The following pre-initialization conditions shall be provided to the store at the MSI (see 5.1.12.1):

a. All power interfaces deactivated.

b. Release consent interface in the inhibit state.

c. Address interface stabilized.

NOTE: Data bus interface, interlock interface, high bandwidth interfaces, low bandwidth interface, and fiber optic interfaces may be active.

5.2.12.2 Power application. [Note 18.]
The store shall be compatible with simultaneous (within 100 milliseconds) application of primary 28 V dc power 1 and either primary 270 V dc or primary 115/200 V ac power to the MSI in a non-predetermined sequence. The store shall not require the application of any other interface power for completing the initialization requirements specified herein.

5.2.12.3 Address determination.
Within 150 milliseconds of interface power application (ac, dc, or both, as required by the store), the store shall interrogate the address discretes (see 5.2.6.2) and accept the assigned address as the store's data bus interface address.

5.2.12.4 First response.
Within 150 milliseconds of interface power application (ac, dc, or both, as required by the store), the store shall be capable of responding to valid commands received over the data bus interface. The required store response shall be either:

a. A valid status word indicating a busy condition, or

b. A valid status word indicating a non-busy condition plus the appropriate valid data words.

If a store receives any commands before the 150 ms has transpired, the store shall either respond as defined above or shall not respond at all.

5.2.12.5 First required non-busy response.
Within 500 ms of interface power application (ac, dc, or both, as required by the store), the store shall be capable of responding to a valid store description message transmit command. This response shall be a valid status word indicating a non-busy condition plus the appropriate valid data words as defined in appendix B.

5.3 Carriage store requirements.

Carriage stores shall provide Carriage Store Interfaces (CSIs) and Carriage Store Station Interfaces (CSSIs) with the following characteristics.

5.3.1 Carriage store HB interfaces.

The carriage store shall provide HB interfaces at each primary signal set CSI and CSSI for bi-directional simplex transfer of type A and type B signals. The CSI and CSSI shall contain all four HB interfaces (HB1, HB2, HB3, and HB4).

5.3.1.1 Minimum transfer capacity.

The carriage store shall support (at a minimum of one CSSI at a time) the transfer of one type A signal and one type B signal (but not simultaneously) on HB1 simultaneously with the transfer of signals on HB2, HB3, and HB4 in accordance with TABLE I. The carriage store shall also support the unidirectional broadcast of HB signals from the CSI to multiple CSSIs on HB1 and HB2 in accordance with TABLE I. As a minimum, only one CSSI need be supported with HB signal transfers at a time. Routing configurations will be defined by the aircraft via the data bus.

TABLE I. Carriage store HB signal transfer.

	Interface Applicability
Point-to-point, bi-directional simplex, CSI to CSSI transfer.	either HB1 Type A -or- HB1 Type B -simultaneously with- HB2 Type A HB3 Type A HB4 Type A.
Broadcast, uni-directional, CSI to CSSI(s) transfer.	HB1 Type B HB2 Type A

5.3.1.2 Type A signal path characteristics.

5.3.1.2.1 Return loss.

The input return loss of each signal path shall not be less than 20 dB over the frequency band 20 Hz to 20 MHz when the output is terminated with the nominal impedance. The output return loss of each signal path shall not be less than 20 dB over the frequency band 20 Hz to 20 MHz when the input is terminated with the nominal impedance.

5.3.1.2.2 Transient response.

The carriage store network transient response shall be such that when each of the signals in FIGURE 5a, FIGURE 6a, FIGURE 7a, and FIGURE 8a is applied to the input, the output signal shall meet the requirements in FIGURE 5b, FIGURE 6b, and FIGURE 8b. For the output response envelope in FIGURE 5b, $V'_{1.0}$ is as defined in FIGURE 7b. For the response envelope in FIGURE 6b, $V'_{1.3}$ is as defined in FIGURE 8b.

5.3.1.2.3 Insertion gain.

The signal path insertion gain between the input and output shall be 0 dB +0.5/-1.0 dB, where insertion gain = 20 log ($V'_{1.3}$ / V). V and $V'_{1.3}$ are defined in FIGURE 8a and FIGURE 8b respectively.

5.3.1.2.4 Representative pulse delay.

The representative pulse delay of any signal path shall not exceed 1.0 microsecond and shall not vary by more than ±35 nanoseconds from its nominal value. The nominal value of the signal path representative pulse delay for the current routing path configuration shall be retained and made available for

transmission to the aircraft if required. When the signal in FIGURE 8a is applied to the input, the representative pulse delay is the time difference between the voltage V/2 being reached on the input signal rising edge and the voltage $V'_{1.3}/2$ being reached on the output signal rising edge where $V'_{1.3}$ is defined in FIGURE 8b.

5.3.1.2.5 Equalization.
The gain misequalization of any signal path shall not exceed the limits shown in FIGURE 9. The zero dB gain reference shall be the gain at 20 kHz. The maximum gain between 20 MHz and 200 MHz shall not exceed +3 dB with respect to the zero-dB gain reference.

5.3.1.2.6 Dynamic range.
When a 1 kHz, 3.5 Vpp sine wave is added to a dc voltage of ±0.25 V and then applied at the CSSI input, the signal at the output of the signal path shall not be compressed or clipped by more than 6 percent. When a 1 kHz, 3.5 Vpp sine wave is added to a dc voltage of ±0.75 V and then applied at the CSI input, the signal at the output of the signal path shall not be compressed or clipped by more than 6 percent.

5.3.1.2.7 Signal path dc offset.
The maximum dc voltage at the output of each signal path shall not exceed ±250 mV with the input terminated.

5.3.1.2.8 Noise.
Noise at the type A signal path outputs shall meet the following requirements over the frequency band 20 Hz to 20 MHz.

5.3.1.2.8.1 Random noise.
Using the weighting function of FIGURE 10, the weighted noise power at each signal path output with the input terminated shall not exceed -45 dBm RMS.

5.3.1.2.8.2 Periodic noise.
The calculated periodic noise voltage at each signal path output with the input terminated shall not exceed 0.52 mVRMS for each valid state of the HB routing network. The noise voltage shall be determined by stimulating each HB and LB interface of the AEIS not associated with the signal path in turn by an in-band, maximum amplitude sinusoidal signal which produces the maximum weighted crosstalk voltage at the signal path output. The weighting function is given in FIGURE 11. The frequency of the stimulus signal may be different at each interface. The calculated periodic noise voltage shall be the root sum of squares of the individual crosstalk voltages plus the unstimulated weighted periodic noise voltage at the signal path output when all HB and LB interfaces are terminated.

5.3.1.2.8.3 Impulse noise.
The impulse noise voltage at the signal path output with the input terminated shall not exceed 10 mV.

5.3.1.2.8.4 Stimulated noise.
No more than -30 dBm of noise shall be added to the signal path noise at the output when a 1.3 Vpp sinusoidal excitation signal of any frequency between 1 MHz and 15 MHz is applied to the input.

5.3.1.2.8.5 Common mode noise.
Using the weighting function of FIGURE 12, the RMS common mode noise voltage at the output of each signal path shall not exceed 200 mV with respect to the output structure ground when the input is terminated and the input signal return is connected to the input structure ground.

5.3.1.3 Signal path electrical characteristics (type B).
None specified at this time.

5.3.1.4 Ground reference (type A).
When configured to carry type A signals, HB signal paths through the carriage store shall be either:

a. Passive, with the signal return (shield) electrically isolated from carriage store structure ground, as shown in FIGURE 21a, or

b. Active, with the output signal return (shield) connected to carriage store structure ground and input signal return (shield) isolated from carriage store structure ground, as shown in FIGURE 21b.

5.3.1.5 Ground reference (type B).
When configured to carry type B signals, the signal return (shield) shall be electrically connected to carriage store structure ground at both the signal path input and output.

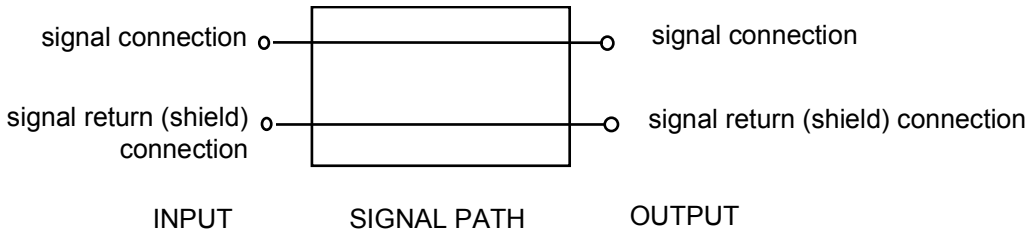

FIGURE 21a. Equivalent circuit of HB Type A passive signal path.

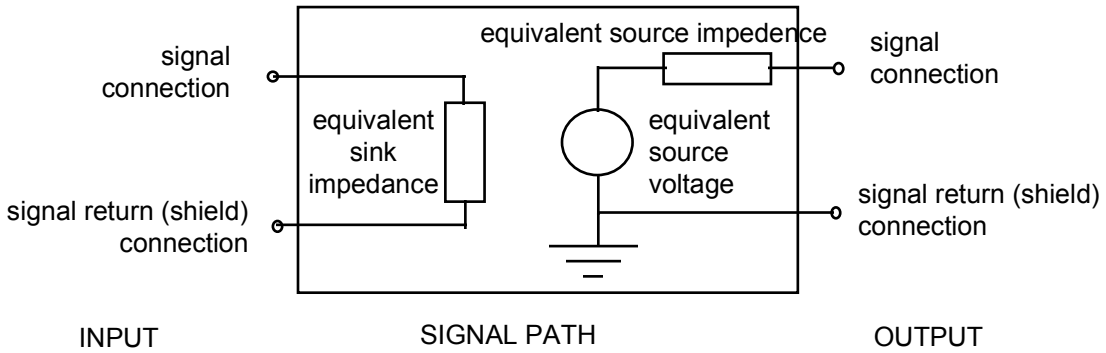

FIGURE 21b. Equivalent circuit of HB Type A active signal path.

FIGURE 21. Equivalent circuits of carriage store HB Type A signal paths.

5.3.2 Carriage store data bus interface.
The carriage store shall transfer data between the CSI and its CSSI(s) as commanded by the aircraft.

5.3.2.1 CSI.
The carriage store shall provide two data bus interfaces (Mux A and Mux B) in the primary signal set CSI. Each of the Mux A and Mux B connections shall include a data high, a data low, and a shield connection. The data bus interfaces at the CSI shall meet the same functional and electrical characteristics as the data bus interfaces at a MSI, as specified in 5.2.2.1 and 5.2.2.2.

5.3.2.2 CSSI.
The carriage store shall provide two data bus interfaces (Mux A and Mux B) at each primary signal set CSSI. Each data bus interface shall include a data high, a data low, and a shield connection. The data bus interfaces at the CSSI shall meet the same functional and electrical characteristics as the data bus interfaces at an ASI, as specified in 5.1.2.1 and 5.1.2.2. [Note 11.]

5.3.3 Carriage store LB interface.
The carriage store shall provide a LB interface at the CSI and at each CSSI for bi-directional simplex transfer of LB signals. Routing configurations will be defined by the aircraft via the data bus interface. When connected to source and sink equipment with impedances defined in 4.3.3, LB signal paths shall have the following characteristics.

5.3.3.1 Minimum transfer capacity.
The carriage store shall support the transfer of LB signals between the CSI and any CSSI. As a minimum, only one CSSI need be supported with LB signal transfers at a time. Specific transfer capacity beyond this minimum is not controlled by this standard.

5.3.3.2 Input/output impedance.
The input impedance (line-to-line) of each signal path shall be 600 ohms ± 60 ohms, over the frequency band 150 Hz to 8 kHz, when the output is terminated with the nominal sink impedance defined in 4.3.3. The output impedance (line-to-line) of each signal path shall be less than 60 ohms, over the frequency band 150 Hz to 8 kHz, when the input is terminated with the nominal source impedance defined in 4.3.3.

5.3.3.3 Insertion gain.
The signal path insertion gain between input and output shall be 0 dB **+**1 dB, **-**2 dB for a 1 kHz sine wave input.

5.3.3.4 Equalization.
The gain misequalization of any signal path shall not exceed the limits shown in FIGURE 22. The zero dB gain reference shall be at 1 kHz.

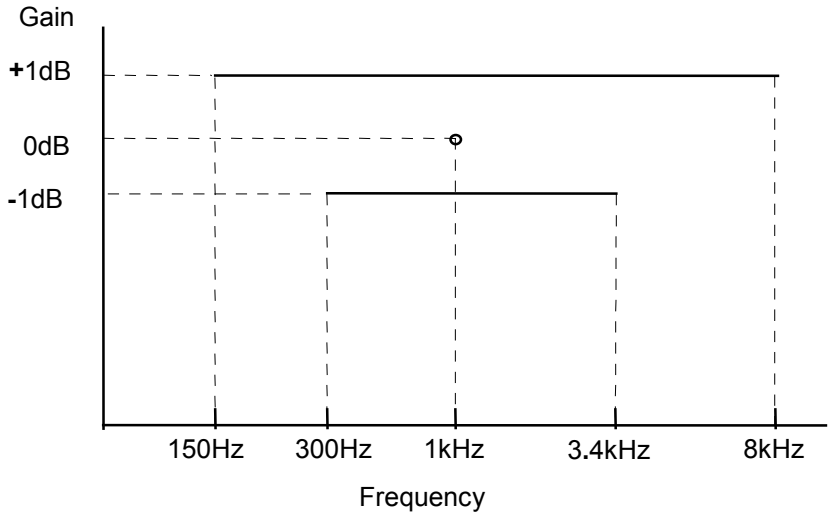

FIGURE 22. Maximum gain misequalization envelope (LB, carriage store).

5.3.3.5 Signal path dc offset.
The maximum dc voltage at the output of each signal path shall not exceed ±1 V line-to-line and ±1 V line-to-ground with the input terminated.

5.3.3.6 Noise.
The signal path noise shall meet the following requirements over the frequency band 150 Hz to 8 kHz except where otherwise specified.

5.3.3.6.1 Periodic and random noise.
The calculated periodic and random noise voltage at each signal path output with the input terminated shall not exceed 6.5 mVRMS for each valid state of the LB routing network. The noise voltage shall be determined by stimulating each LB and HB interface of the AEIS not associated with the signal path in turn by an in-band (150 Hz to 8 kHz), maximum amplitude sinusoidal signal which produces the maximum crosstalk voltage at the signal path output. The frequency of the stimulus signal may be different at each interface. The calculated noise voltage shall be the root sum of squares of the individual crosstalk voltages plus the unstimulated periodic and random noise voltage at the signal path output when all LB and HB interfaces are terminated.

5.3.3.6.2 Impulse noise.
With the input of the signal path terminated, there shall be (to one standard deviation) no more than one occurrence of impulse noise exceeding 20 mV peak over a three minute period. The impulse noise voltage shall apply when band-limited to 8 kHz low pass.

5.3.3.6.3 Stimulated noise.
For any frequency between 300 Hz and 3.4 kHz, application of a 12 Vpp sinusoidal excitation signal to the signal path input shall not add more than 50 mV RMS of noise to the output over the frequency band 150 Hz to 8 kHz.

5.3.3.6.4 Common mode noise.
The peak common mode noise voltage at the output of each signal path (CSI and CSSI) shall not exceed ±0.5 V when the input is terminated and the input shield is at the same potential as local structure ground. This requirement shall apply over the band 150 Hz to 50 kHz.

5.3.3.7 Ground reference.
LB signal paths through the carriage store shall be either:

a. Passive, as shown in FIGURE 23a, or

b. Active, with outputs referenced to carriage store ground, as shown in FIGURE 23b.

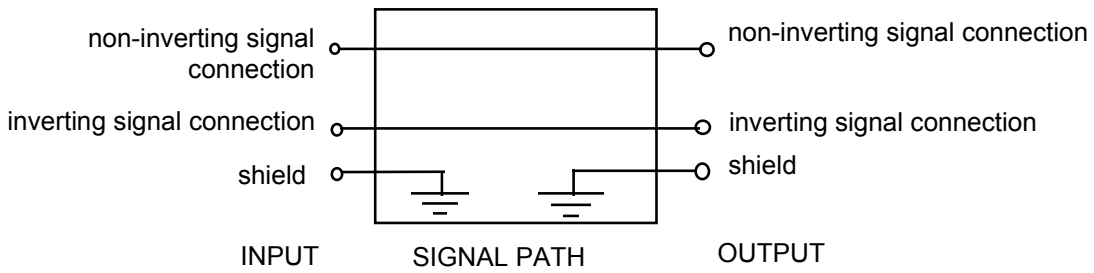

FIGURE 23a. Equivalent circuit for LB passive signal path.

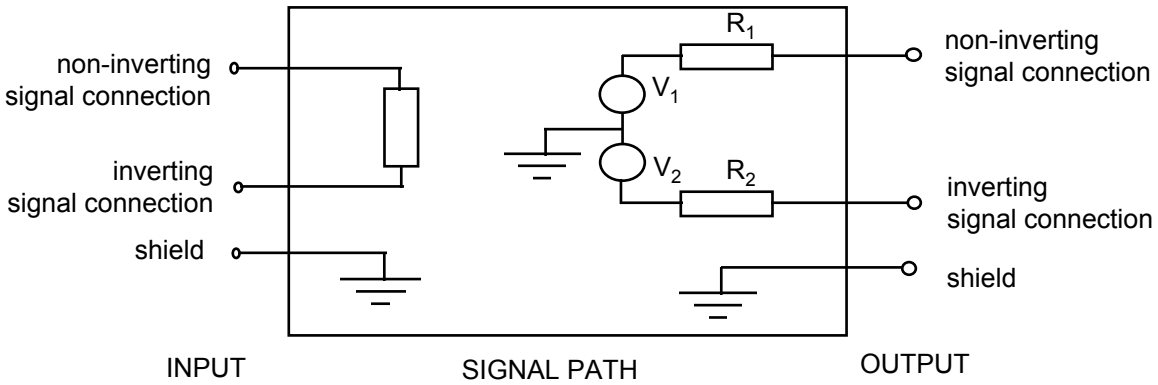

Notes: 1. V1-V2 is the Thevenin equivalent voltage source (balanced with respect to ground).
2. R1+R2 is the Thevenin equivalent source impedance.

FIGURE 23b. Equivalent circuit for LB active signal path.

FIGURE 23. Equivalent circuits for LB carriage store signal paths.

5.3.4 Carriage store release consent interface.
The carriage store shall provide connections for a release consent interface at the CSI and each CSSI.

5.3.4.1 CSI.
The carriage store shall use the release consent signal from the aircraft to enable/inhibit fire, launch, release, or jettison functions. The carriage store shall act on release consent-interlocked safety critical commands received over the data bus interface only if the release consent signal is in the enabled state. Release consent at a CSI shall meet the same requirements as release consent at an MSI, as stated in paragraphs 5.2.4.1 through 5.2.4.6.

5.3.4.2 CSSI.
The carriage store shall provide a release consent interface at each primary signal set CSSI for transferring an enable/inhibit signal to the connected store(s). Release consent, when in the enabled state, shall indicate consent for stores to perform safety critical functions (such as missile launch from a rail launcher or rocket firing from a dispenser) when commanded over the data bus interface. When in the inhibited state, the release consent interface at a CSSI shall be electrically isolated from the release consent interface at all other CSSIs. The isolation shall be 100 kilohms minimum at dc. Release consent at a CSSI shall meet the same requirements as release consent at an ASI, as stated in paragraphs 5.1.4.1 through 5.1.4.6, with the following clarifications and exceptions:

a. If release consent is required by a store, the release consent signal shall attain the enable state at least 10 milliseconds prior to transferring the safety critical command over the data bus interface or prior to the firing signal.

b. If release consent at a CSSI has been enabled, the carriage store shall operate under the assumption that the store connected to the CSSI may remain in an enable state for up to 10 milliseconds after the release consent signal has returned to the inhibit state.

5.3.4.3 CSI to CSSI transfer.
Release consent shall be in the enable state at the CSI before release consent can be in the enable state at any CSSI. When release consent is in the inhibit state at the CSI, release consent shall be in the inhibit state at all CSSIs.

5.3.5 Carriage store interlock interface.
The carriage store shall provide connections for an interlock interface in the primary signal set CSI and all primary CSSI locations and also in the auxiliary power signal set CSI and all auxiliary CSSI locations.

5.3.5.1 CSI.
The interlock interface at each primary and auxiliary CSI shall meet the same requirements as the MSI interlock interface, as stated in 5.2.5.

5.3.5.2 CSSI.
The carriage store shall monitor interlock and shall provide information to the aircraft (via the data bus interface) on the mated status of each CSSI connector. The interlock interface at each primary and auxiliary CSSI shall meet the same open circuit voltage, excitation current, and impedance detection threshold requirements as the ASI interlock interface, as stated in 5.1.5.

5.3.5.3 Isolation.
The carriage store shall electrically isolate both the interlock and interlock return connections at the CSI from all carriage store circuits and grounds. The interlock signal at each CSSI connector shall be isolated from the interlock signal at all other CSSI connectors. The isolation shall be 100 kilohms or greater from dc to 4 kHz.

5.3.6 Carriage store address interface.
The carriage store shall provide connections for an address interface at the CSI and CSSI. Each address interface shall include five binary encoded address bit connections (A_0, A_1, A_2, A_3, and A_4), one address parity connection and one common address return connection.

5.3.6.1 CSI.
The carriage store shall use the address interface from the aircraft for detecting the assigned store data bus address and for determining the mated status of the CSI. The address interface at a CSI shall meet the same requirements as the address interface at an MSI, as stated in paragraphs 5.2.6.1 through 5.2.6.4.

5.3.6.2 CSSI.
The carriage store shall provide an address interface at each primary signal set CSSI for assigning a data bus address to the MIL-STD-1553 remote terminal in the mission store mated to the CSSI. The carriage store shall use this interface only for assigning an address to the remote terminal associated with the directly connected mission store. The address interface at a CSSI shall meet the same requirements as the address interface at an ASI, as stated in paragraphs 5.1.6.1 through 5.1.6.4.

5.3.7 Carriage store structure ground. [Note 19.]

5.3.7.1 CSI Structure Ground Characteristics.
The carriage store shall provide a conductive path from the CSI structure ground to carriage store structure, capable of carrying the overcurrent level defined in FIGURE 17 for the primary CSI interfaces and FIGURE 18 for the auxiliary CSI power interfaces. The structure ground interface shall not be used as a signal return path or power return path except under fault conditions within the carriage store. The voltage drop between the CSI structure ground interface and carriage store ground shall not exceed 0.2 volts when conducting 10 amperes (continuous) for the primary CSI and 30 amperes (continuous) for the auxiliary CSI.

5.3.7.2 CSSI Structure Ground Characteristics.
The carriage store shall provide a conductive path from the CSSI structure ground to carriage store structure, capable of carrying the overcurrent level defined in FIGURE 17 for the primary CSSI interfaces and FIGURE 18 for the auxiliary CSSI power interfaces. The structure ground interface shall not be used as a signal return path or power return path except under fault conditions within the mission store. The voltage drop between the CSSI structure ground interface and carriage store ground shall not exceed 0.2 volts when conducting 10 amperes (continuous) for the primary CSSI and 30 amperes (continuous) for the auxiliary CSSI.

5.3.8 Carriage store 28 V dc power interface.
The carriage store shall provide connections for the 28 V dc power interfaces at the CSI and the 28 V dc power interfaces at the CSSI(s). The aircraft shall control all 28 V dc power. The primary signal set CSI and CSSI(s) shall contain 28 V dc power 1 and 28 V dc power 1 return connections and 28 V dc power 2 and 28 V dc power 2 return connections. The auxiliary power signal set CSI and CSSI(s) shall contain a 28 V dc power connection and a 28 V dc power return connection.

5.3.8.1 CSI.
The 28 V dc power interfaces at the CSI shall meet the same requirements as the 28 V dc power interfaces at an MSI, as stated in paragraphs 5.2.8.1 through 5.2.8.8, except for the following: The CSI shall be compatible with a normal steady state lower voltage limit of 22.0 V dc, minus the drop in the ASI to CSI umbilical as defined in FIGURE 24.

5.3.8.2 CSSI.
The 28 V dc power interfaces at each CSSI shall meet the same requirements as the 28 V dc power interfaces at an ASI, as stated in paragraphs 5.1.8.1 through 5.1.8.8, except for the following:

a. The normal steady state lower voltage limit at a CSSI shall be 20.0 V dc, plus the drop in the CSSI to MSI umbilical as defined in FIGURE 24.

b. The carriage store need not provide overcurrent protection as long as it is provided by the aircraft as required in 5.1.8.4.

5.3.9 Carriage store 115/200 V ac power interfaces.
The carriage store shall provide connections for a set of three-phase four-wire wye-connected 115/200 V ac power interfaces at the CSI and at the CSSI(s). The aircraft shall control all 115/200 V ac power. The

primary CSI and CSSI(s) and the auxiliary CSI and CSSI(s) shall contain 115 V ac phase A, phase B, phase C, and neutral connections.

5.3.9.1 CSI.
The 115/200 V ac power interface at the CSI shall meet the same requirements as the 115/200 V ac power interfaces at an MSI, as stated in 5.2.9.1 through 5.2.9.10, except for the following: The CSI shall be compatible with a normal steady state lower voltage limit of 108.0 V ac, minus the drop in the ASI to CSI umbilical as defined in FIGURE 24.

5.3.9.2 CSSI.
The 115/200 V ac power interface at the CSSI shall meet the same requirements as the 115/200 V ac power interfaces at an ASI, as stated in paragraphs 5.1.9.1 through 5.1.9.11, except for the following:

a. The normal steady state lower voltage limit at a CSSI shall be 105 V ac, plus the drop in the CSSI to MSI umbilical as defined in FIGURE 24.

b. The carriage store shall be capable of providing at least 90 percent of the maximum load current levels of FIGURE 17a simultaneously through each of the three 115 V ac power phases of the primary signal set CSSI.

c. The total 115 V ac continuous current provided simultaneously through both primary and auxiliary interfaces at any class IA CSSI need not exceed 29 amperes per phase.

d. The carriage store need not provide overcurrent protection as long as it is provided by the aircraft as required in 5.1.9.4.

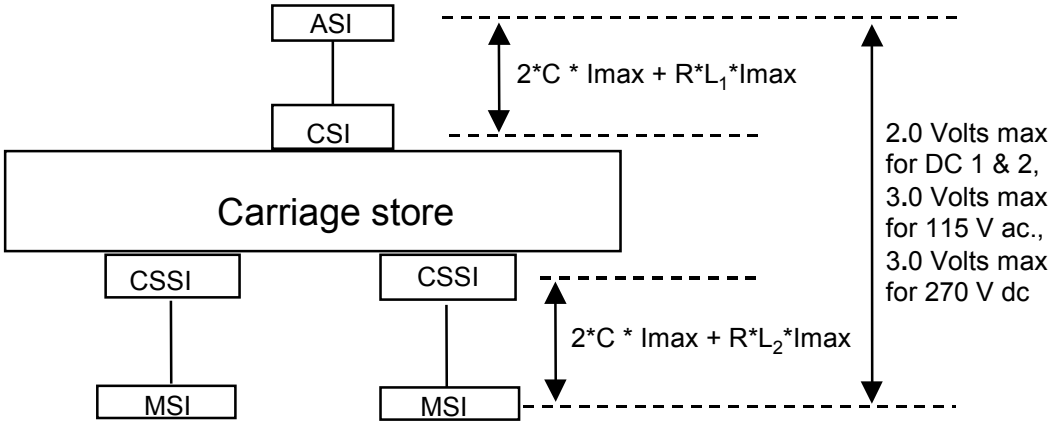

C = Contact pair resistance
Imax = Max rated current = 10 A for primary, 30 A for auxiliary
R = Resistance of umbilical per meter
L = Length of umbilical cable, meters

Notes: 1. Reference paragraph 5.4.8, 5.4.9 and 5.4.10 for contact resistance and umbilical cable resistance.

2. This figure does not place a specific voltage drop requirement on the carriage store, but rather places a requirement on the total voltage drop allowed across the carriage store and the umbilicals it is to be used with.

FIGURE 24. Carriage store voltage drop diagram.

5.3.10 Carriage store 270 V dc power interfaces. [Note 17.]
The carriage store shall provide connections for the 270 V dc power interfaces at the CSI and the 270 V dc power interfaces at the CSSI(s). The carriage store shall provide the capability for the aircraft to control all 270 V dc power. The primary signal set CSI and CSSI(s) shall contain 270 V dc power and 270 V dc power return connections. The auxiliary power signal set CSI and CSSI(s) shall contain a 270 V dc power connection and a 270 V dc power return connection.

5.3.10.1 CSI.
The 270 V dc power interfaces at the CSI shall meet the same requirements as the 270 V dc power interfaces at an MSI, as stated in paragraphs 5.2.10.1 through 5.2.10.7, except for the following: The CSI shall be compatible with a normal steady state lower voltage limit of 250.0 V dc, minus the drop in the ASI to CSI umbilical as defined in FIGURE 24.

5.3.10.2 CSSI.
The 270 V dc power interfaces at each CSSI shall meet the same requirements as the 270 V dc power interfaces at an ASI, as stated in paragraphs 5.1.10.1 through 5.1.10.8, except for the following:

a. The normal steady state lower voltage limit at a CSSI shall be 247 V dc, plus the drop in the CSSI to MSI umbilical as defined in FIGURE 24.

b. The carriage store need not provide overcurrent protection as long as it is provided by the aircraft as required in 5.1.10.4.

5.3.11 Carriage store fiber optic interface.
All interface connectors at all CSIs and CSSIs shall include provisions for two fiber optic paths (FO1 and FO2). The fiber optic interfaces shall comply with the requirements specified in 5.1.11 and subparagraphs. Use of the fiber optic interfaces by a carriage store shall not occur until the optical and logical (protocol) characteristics of the fiber optic interfaces are added to this standard.

5.3.12 Carriage store initialization.
Carriage stores shall comply with the same initialization requirements as a mission store, as stated in paragraphs 5.2.12 through 5.2.12.5. A carriage store shall be initialized by the aircraft prior to initializing mission stores connected to its CSSIs. Carriage stores, under control of the aircraft, shall comply with the same procedure for initializing mission stores connected to MSSIs as the aircraft must meet for initializing stores, as stated in paragraph 5.1.12 through 5.1.12.3.

5.4 Umbilical cable requirements.
Unless otherwise specified, the following requirements apply to both the primary and auxiliary interface umbilical cables. The umbilical cable is an electrical harness assembly used to passively interconnect an ASI to an MSI, an ASI to a CSI, or a CSSI to an MSI. The umbilical cable shall provide a direct connection from the interface at one end of the umbilical to the corresponding interface at the other end with no other connections. Umbilical cable length is not specified herein, but should be standardized where possible.

5.4.1 Primary umbilical HB interfaces.
The HB interface cables in the umbilical shall meet the form, fit, function, and interface requirements of MIL-C-17/113 cable for HB1 and HB2 and meet the form, fit, function, and interface requirements of MIL-C-17/94 for HB3 and HB4. The signal returns shall be electrically isolated from each other and the umbilical gross shield.

5.4.2 Primary umbilical data bus interface.
The data bus interface shielded twisted pair cables in the umbilical shall comply with MIL-STD-1553 cable characteristics. The Mux A and Mux B shields shall be isolated (100 kilohms minimum at dc) from all umbilical circuits, shields, and connector shells.

5.4.3 Primary umbilical LB interface.
The LB cable in the umbilical shall comply with the same characteristics required in 5.4.2. The LB cable shield shall be isolated (100 kilohms minimum at dc) from all umbilical circuits, shields, and connector shells.

5.4.4 Primary umbilical release consent interface.
The release consent interface line shall have a resistance not exceeding 32 milliohms per meter length of umbilical, plus 8.8 milliohms for each mated contact pair, when passing the worst case voltage and current profiles defined in paragraphs 5.1.4.2 and 5.2.4.2.

5.4.5 Umbilical interlock interface.
Each interlock interface line shall have a resistance not exceeding 32 milliohms per meter length of umbilical, plus 8.8 milliohms for each mated contact pair, when passing the worst case voltage and current profiles defined in paragraphs 5.1.5 and 5.2.5.

5.4.6 Primary umbilical address interface.
Each address interface line shall have a resistance not exceeding 32 milliohms per meter length of umbilical, plus 8.8 milliohms for each mated contact pair, when passing the worst case voltage and current profiles defined in paragraphs 5.1.6.2 and 5.2.6.2.

5.4.7 Umbilical structure ground.
The primary interface structure ground line shall have a resistance not exceeding 14 milliohms per meter length of umbilical, plus 4.54 milliohms for each mated contact pair. The auxiliary power interface structure ground line shall have a resistance not exceeding 4 milliohms per meter length of umbilical, plus 1.21 milliohms for each mated contact pair. For primary and auxiliary umbilicals, this requirement applies when passing the worst case voltages and steady state current defined in paragraph 5.1.7 and 5.2.7.

5.4.8 Umbilical 28 V dc power interface.
Each primary interface 28 V dc power interface line shall have a resistance not exceeding 14 milliohms per meter length of umbilical, plus 4.54 milliohms for each mated contact pair. Each auxiliary 28 V dc power interface line shall have a resistance not exceeding 4 milliohms per meter length of umbilical, plus 1.21 milliohms for each mated contact pair. For both umbilical types, the requirement applies when passing the worst case voltages and steady state current defined in paragraphs 5.1.8.2 and 5.2.8.2.

5.4.9 Umbilical 115 V ac power interface.
Each primary 115 V ac power interface line shall have a resistance not exceeding 14 milliohms per meter length of umbilical, plus 4.54 milliohms for each mated contact pair. Each auxiliary 115 V ac power line shall have a resistance not exceeding 4 milliohms per meter length of umbilical, plus 1.21 milliohms for each mated contact pair. For both umbilical types, the requirement applies when passing the worst case voltages and steady state current profiles defined in 5.1.9.2 and 5.2.9.2.

5.4.10 Umbilical 270 V dc power interface. [Note 18.]
Each primary interface 270 V dc power interface line shall have a resistance not exceeding 14 milliohms per meter length of umbilical, plus 4.54 milliohms for each mated contact pair. Each auxiliary 270 V dc power interface line shall have a resistance not exceeding 4 milliohms per meter length of umbilical, plus 1.21 milliohms for each mated contact pair. For both umbilical types, the requirement applies when passing the worst case voltages and steady state current defined in paragraphs 5.1.10.3 and 5.2.10.2.

5.4.11 Primary umbilical fiber optic interface.
The fiber optic interfaces shall comply with paragraph 5.1.11.

5.4.12 Umbilical gross shield.
The umbilical cable shall include a gross shield enclosing the entire umbilical wire bundle (360 degree coverage) and electrically connecting the connector shells on each end of the umbilical. The umbilical shield shall be 360 degree bonded to the connector shell on each end of the umbilical. DC resistance of the bond between the shield and the connector shell shall not exceed 2.5 milliohms.

5.5 Power interface interrupts.

5.5.1 Mission store compatibility. [Note 22.]

Power interrupts of 200 microseconds or less on 28 V dc, 270 V dc or 115 V ac power interfaces, or any combination thereof, shall have no effect on store function. Full function, including communication, shall be maintained during such interrupts and no power interrupt notification shall occur. For power interrupts greater than 200 microseconds, the store may request full or partial initialization.

5.5.2 Carriage store compatibility. [Note 22.]

Power interrupts of 200 microseconds or less on 28 V dc, 270 V dc or 115 V ac power interfaces, or any combination thereof, shall have minimal effect on carriage store function, i.e., any carriage store function not maintained during the interrupt shall be re-established immediately following restoration of power. The following functions shall be maintained during interrupts of up to 200 microseconds: (1) all computing capabilities and (2) transmission/reception of data via the data bus interfaces. Furthermore, no re-initialization is permitted and no power interrupt notification shall occur. For power interrupts greater than 200 microseconds, the carriage store may request full or partial initialization.

5.5.3 Aircraft compatibility. [Note 22.]

The aircraft shall be compatible with stores which request full or partial store system initialization following an interrupt to the 28 V dc, 270 V dc or 115 V ac power, or any combination thereof, in excess of that allowed in 5.5.1 and 5.5.2.

5.5.3.1 Full initialization.

If the store requests full initialization, then the aircraft shall use paragraphs 5.1.12.1 through 5.1.12.3 to satisfy the request. The aircraft, however, is not required to request the store description message demanded in 5.1.12.3.

5.5.3.2 Partial initialization.

If no partial initialization procedure has been agreed in the Interface Control Document between the aircraft and store, the aircraft shall substitute full initialization.

5.5.4 Store power interrupt notification.

In the event that the store requires a full or partial initialization after a power interrupt in excess of that allowed in paragraph 5.5.1 and 5.5.2, the store shall notify the aircraft utilizing the service request with vector word procedure in paragraphs B.4.1.5.4 through B.4.1.5.7. That procedure uses the asynchronous vector word (TABLE B- III) which shall indicate whether full or partial initialization (as defined in the ICD) is required.

5.6 Connector characteristics.

5.6.1 Primary interface connectors.

a. ASI and CSSI Type 1 (hand mated) connectors shall meet the form, fit, function, and interface requirements of MIL-DTL-38999/20 or /24, Series III, Shell Size 25, Polarization Key Identification N connectors. The contacts/termini and seal plugs/dummy contacts shall be compatible with the form, fit, function, and interface characteristics of those listed in TABLE II.

b. ASI and CSSI Type 2 (blind mated) connectors shall meet the form, fit, function, and interface requirements of the MIL-DTL-83538 Launcher Receptacle and be intermateable with the MIL-DTL-83538 Buffer Plug. The receptacle contacts/termini and seal plugs/dummy contacts shall meet the form, fit, function, and interface characteristics of those listed in TABLE II.

c. MSI and CSI Type 1 (hand mated) connectors shall be intermateable with MIL-DTL-38999/31, Series III, Shell Size 25, Polarization Key Identification N connectors. The contacts/termini and seal plugs/dummy contacts used shall be intermateable with those listed in TABLE II.

d. MSI and CSI Type 2 (blind mated) connectors shall meet the form, fit, function, and interface requirements of the MIL-DTL-83538 Store Receptacle and shall be intermateable with the MIL-DTL-83538 buffer plug. The contacts/termini and seal plugs/dummy contacts used shall be intermateable with those listed in TABLE II.

e. The Type 2 Buffer Plug, which is the interconnecting mechanism used between the Type II Launcher Receptacle and the Type 2 Store Receptacle, shall meet the form, fit, function, and interface requirements of the MIL-DTL-83538 Buffer Plug and shall be intermateable with the MIL-DTL-83538 Launcher Receptacle and Store Receptacle. The buffer plug shall use fixed contacts as defined in MIL-DTL-83538.

f. All primary signal set connector insert arrangements shall be in accordance with MIL-STD-1560, Insert Arrangement No. 25-20.

g. The contact assignments in all primary signal set connectors shall be in accordance with TABLE III.

5.6.2 Auxiliary power interface connector.

a. The connector shall meet the form, fit, function, and interface characteristics of a MIL-DTL-38999, Series III, Shell Size 25, Polarization Key Identification A connector.

b. The contacts/termini and seal plugs/dummy contacts shall meet the form, fit, function, and interface characteristics of those listed in TABLE IV.

c. All auxiliary power interface connector insert arrangements shall be in accordance with MIL-STD-1560, Insert Arrangement No. 25-11.

d. The contact assignments shall be in accordance with TABLE V.

5.6.3 Connector receptacle.
The ASI, CSI, CSSI, and MSI primary and auxiliary connectors shall be receptacles with socket contacts or socket termini.

5.6.4 Plugged cavities. [Note 23.]
The ASI may use plugged cavities in lieu of socket contacts for the 115 V ac or the 270 V dc interface (whichever is not used –see para 4.3.8). The ASI, CSI and CSSI may use dummy termini in lieu of active termini for the fiber optic interface. The ASI may also use plugged cavities in lieu of socket contacts for the HB2 and HB4 interfaces if only a class II interface is implemented. The Auxiliary ASI may use plugged cavities in lieu of socket contacts for any unused interface. The MSI may use plugged cavities in lieu of socket contacts or socket termini for any unused interface. Details on seal plugs can be found in TABLE II and TABLE IV.

5.6.5 Umbilical primary interface connectors.
The connectors on primary signal set umbilical cables shall be intermateable with the connectors and insert arrangement defined in 5.6.1. The connectors on both ends of the cable shall be plugs with pin contacts. The lanyard release connector on the MSI end of the cable shall meet the form, fit, function, and interface requirements of MIL-C-38999/31. The contact assignments shall be compatible with the contact assignments of TABLE III. The connectors may use plugged cavities in lieu of pin termini for the fiber optic interface.

5.6.6 Umbilical auxiliary interface connectors. [Note 24.]
The connectors on auxiliary signal set umbilical cables shall be intermateable with the connectors and insert arrangement defined in 5.6.2. The connectors on both ends of the cable shall be plugs with pin contacts. The lanyard release connector on the MSI end of the cable shall meet the form, fit, function, and interface requirements of MIL-C-38999/31. The contact assignments shall be compatible with the contact assignments of TABLE V.

5.6.7 Connector keyway orientation.

5.6.7.1 ASI and CSSI.
The connector keyway orientation shall conform to the following:

a. With the interface connector positioned such that the longitudinal axis of the connector (the axis that traverses from the back of the connector through the center to the front of the connector) is in the horizontal plane of the aircraft and the connector face is facing forward on the aircraft, the major (large) keyway shall be located in the up position (see FIGURE 25a).

b. With the interface connector positioned such that the longitudinal axis of the connector is in the vertical plane of the aircraft and the connector face is facing down on the aircraft, the major (large) keyway shall be located in the forward position (see FIGURE 25b).

c. With the interface connector positioned such that the longitudinal axis of the connector is in the horizontal plane of the aircraft and the connector face is facing aft of the aircraft, the major (large) keyway shall be located in the down position (see FIGURE 25c).

d. With the interface connector positioned such that the longitudinal axis of the connector is in the horizontal plane of the aircraft and the connector face is facing inboard or outboard of the aircraft, the major (large) keyway shall be located in the forward position (see FIGURE 25d).

5.6.7.2 MSI and CSI.
The connector keyway orientation shall conform to the following:

a. With the connector mounted on the store top surface, the major keyway (large) shall be located forward.

b. With the connector mounted on the store aft vertical surface, the major keyway (large) shall be located up.

5.6.7.3 Umbilical cable.
The keyway orientation of the connectors at each end of the umbilical shall conform to FIGURE 25. The cable shall have sufficient torsional flexibility to align the keyway of the connector at one end of the umbilical with the keyway of the connector at the opposite end.

5.6.8 Connector location.

5.6.8.1 ASI and CSSI.
There is no defined location for the ASI connector. It should be located such that, wherever practicable, the umbilical can be standardized in length with other locations.

5.6.8.2 MSI and CSI.
MSI and CSI connector location for Type I and type II connectors shall conform to MIL-A-8591.

TABLE II. Primary signal set connector contacts/termini and seal plugs.

Size	MIL-C-39029 Slash Sheet	FIBER OPTIC TERMINUS	Abbreviated Title	Seal Plugs/Dummy Contacts
20	/56	na	Contact, socket	MS27488-20 RED
20	/58	na	Contact, pin	MS27488-20 RED
16	/56	na	Contact, socket	MS27488-16 BLUE
16	/58	na	Contact, pin	MS27488-16 BLUE
12	/28	na	Contact, shielded, pin	M85049/80-12 YELLOW
12	/102	na	Contact, coaxial, pin	M85049/80-12 YELLOW
12	/75	na	Contact, shielded, socket	M85049/80-12 YELLOW
12	/103	na	Contact, coaxial, socket	M85049/80-12 YELLOW
8	/90	na	Contact, concentric twinax, pin	M85049/80-8 GREEN
8	/91	na	Contact, concentric twinax, socket	M85049/80-8 GREEN
16	na	TBD	Terminus, pin	TBD
16	na	TBD	Terminus, socket	TBD

TABLE III. Primary signal set contact functional assignment. [Note 25.]

CONTACT LOCATION	SIZE	NOMENCLATURE
A	8	LB 1/
B	20	Interlock
C	16	28V DC power 1
D	16	28V DC power 1 return
E	16	28V DC power 2 return
F	16	28V DC power 2
G	20	Address parity
H	8	Mux B 2/
J	16	115V AC, phase C 4/
K	8	Mux A 2/
L	20	Address bit A_0
M	16	115V AC, phase B 4/
N	16	270V DC return
P	16	115V AC, phase A 4/
R	16	270V DC power
S	20	Interlock return
T	16	Structure ground
U	16	FO 2
V	20	Address bit A_4
W	12 5/	HB 2 3/
X	20	Address bit A_1
Y	16	FO 1
Z	16	115V AC neutral
1	20	Release consent
2	12 6/	HB 4 3/
3	12 6/	HB 3 3/
4	20	Address bit A_3
5	12 5/	HB 1 3/
6	20	Address return
7	20	Address bit A_2

1/ The LB contact is a twinaxial style contact. LB signal assignments within the contact are:

Center contact:	Non-inverting
Intermediate contact:	Inverting
Outer contact:	Shield

2/ The Mux A and B contacts are a twinaxial style contact. Mux A and Mux B signal assignments within the contact are:

Center contact:	Mux data high
Intermediate contact:	Mux data low
Outer contact:	Mux shield

3/ The HB contacts are a coaxial style contact. Signal assignments within the contact are:

Center contact:	Signal
Outer contact:	Signal return (shield)

4/ Phase rotation shall comply with the requirements of 5.1.9.7.

5/ Contacts MIL-C-39029 /102, /103 only to be used.

6/ Contacts MIL-C-39029 /28, /75 only to be used.

TABLE IV. Auxiliary power signal set connector contacts and seal plugs. [Note 26.]

Size	MIL-C-39029 Slash Sheet	Abbreviated Title	Seal Plugs /Dummy Contacts
20	/56	Contact, socket	MS27488-20 RED
20	/58	Contact, pin	MS27488-20 RED
10	/56	Contact, socket	M85049/81-8 GREEN
10	/58	Contact, pin	M85049/81-8 GREEN

TABLE V. Auxiliary power signal set contact functional assignment.

CONTACT LOCATION	SIZE	NOMENCLATURE
A	10	115V AC, Phase A 1/
B	10	28V DC
C	10	115V AC, Phase B 1/
D	10	28V DC return
E	10	115V AC, Phase C 1/
F	10	270V DC
G	10	115V AC neutral
H	10	270V DC return
J	10	Structure ground
K	20	Interlock
L	20	Interlock return

1/ Phase rotation shall comply with the requirements of 5.1.9.7.

[Note 27.]

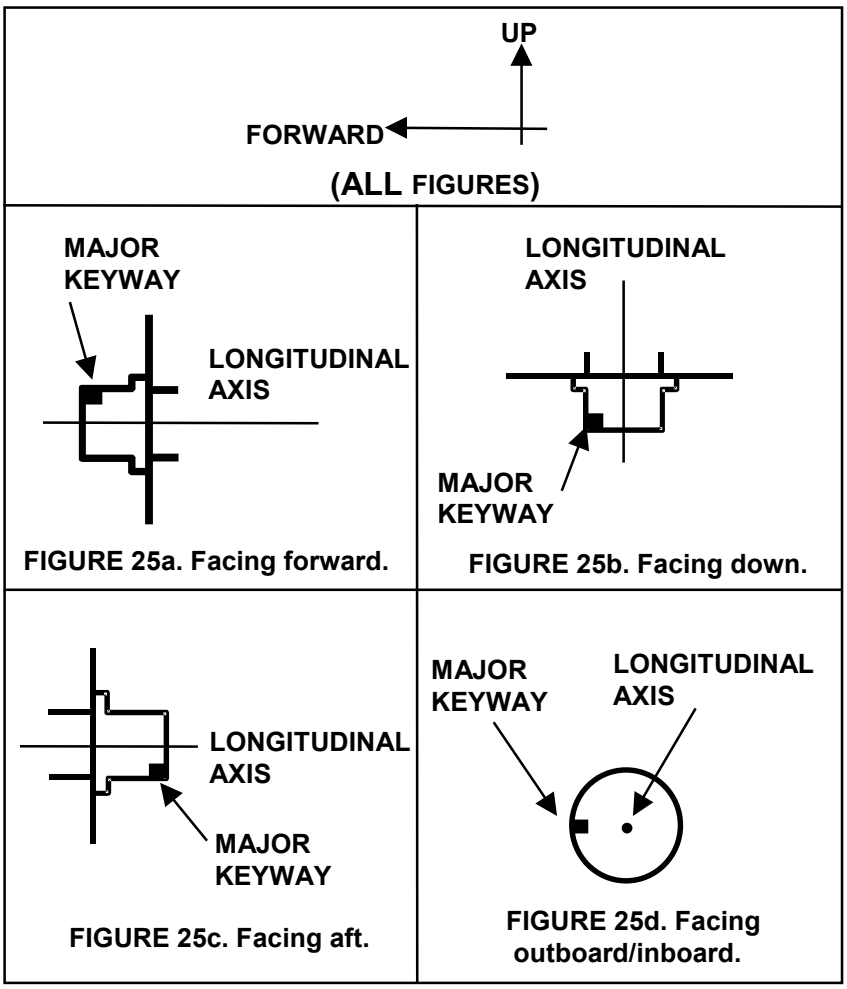

FIGURE 25. Connector orientation.

6. NOTES

(This section contains information of a general or explanatory nature that may be helpful, but is not mandatory.)

6.1 Intended use.

This standard is intended to be used for airborne military applications and applies to all aircraft and stores that electrically interface with each other.

6.1.1 Implementation.

Implementation and application of the standard are the responsibility of each military service, with technical guidance and direction provided by appropriate service program offices.

6.2 Issue of DoDISS.

When this standard is used in acquisition, the issue of the DoDISS to be applicable to this solicitation must be cited in this solicitation (see 2.2.1 and 2.3).

6.3 International standardization agreements.

Certain provisions of this standard are subject to international standardization agreements: NATO STANAG and ASCC Air Standard. When change notice, revision, or cancellation of this standard is proposed that will modify the international agreement concerned, the preparing activity will take appropriate action through international standardization channels, including departmental standardization offices, to change the agreement or make other appropriate accommodations. It is intended that MIL-STD-1760 will be compatible with the following documents:

a. STANAG 3350, Analogue Video Standard for Aircraft System Applications;

b. STANAG 3837, Aircraft Stores Electrical Interconnection System

c. STANAG 3838, Digital Time Division Command/Response Multiplex Data Bus.

6.4 Tailoring guidance.

MIL-STD-1760 defines a standard connector and signal interface between stores and aircraft. As such, most of the requirements are essential to the interoperability of these stores and aircraft; exceptions are discussed in the draft handbook, which also discusses the design of the systems in the aircraft and store that support and use this interface and must be tailored to the mission of the system.

6.5 Keyword listing.

aircraft
aircraft station
audio signals
avionics
bus controller
data word
discrete signals
electrical connector
electrical interface
electrical power
high bandwidth signals
low bandwidth signals
remote terminal
serial data bus
store
stores management system
suspension and release equipment
video signals

6.6 Changes from previous issue.

Major changes between revision C and revision D are explained by comments. These comments consist of a note number in parenthesis in the text, referring to a note in the list of notes that appears as appendix C. A Microsoft Word™ computer file, with revisions (additions, modifications, corrections, deletions) from the previous issue marked, along with the comments, is available to users from the Responsible Engineer at the preparing activity. The comments and the computer file with revisions marked are provided as a convenience only and the Government assumes no liability whatsoever for any inaccuracies in these notations. Bidders and contractors are cautioned to evaluate the requirements of this document based on the entire content irrespective of the change notations and relationship to the last previous issue.

ADDITIONAL INTERFACE REQUIREMENTS FOR GPS RF SIGNALS [Note 28.]
APPENDIX A

A.1. SCOPE

A.1.1 Purpose.
This appendix shall be used to establish interface requirements on aircraft and mission stores for the Navstar Global Positioning System (GPS) RF signal assignment. For compliance with the standard, aircraft and mission stores are not required to support this signal assignment at system level. If the assignment is supported however, the requirements in this appendix shall be met.

A.2. APPLICABLE DOCUMENTS

A.2.1 References.
The documents referenced in this appendix are not intended to be applied contractually.

A.2.2 Government documents, drawings and publications.

STANAG 4294 (Part 1) Navstar Global Positioning System (GPS) System Characteristics

A.3. DEFINITIONS, ACRONYMS AND ABBREVIATIONS

A.3.1 Definitions.
The following definitions, in addition to those in section 3.0, apply to this appendix.

A.3.1.1 Navstar global positioning system (GPS).
The Navstar GPS is a satellite-based radio-positioning, navigation and time transfer system with characteristics as defined in STANAG 4294.

A.3.1.2 L1 and L2.
L1 and L2 are D-band carriers as specified in STANAG 4294.

A.3.1.3 Power gain.
L1 gain is the power gain determined at the nominal frequency of the L1 carrier. L2 gain is the power gain determined at the nominal frequency of the L2 carrier.

A.3.1.4 Correlation loss.
The following assumes that the input signal has no correlation loss as described in STANAG 4294. In a GPS signal distribution system, correlation loss is defined as the decibel difference between the signal power in a 20.46MHz bandwidth that would be delivered to an output if the signal path exhibited zero gain misequalization about the nominal carrier frequency, and the actual signal power that would be recovered if an ideal correlation receiver of the same bandwidth were connected to that output.

A.3.1.5 Effective gain.
In a GPS signal distribution system, the L1_P(Y) effective gain is defined as the L1 gain minus the L1_P(Y) correlation loss, the L2_P(Y) effective gain is defined as the L2 gain minus the L2_P(Y) correlation loss, and the L1_C/A effective gain is defined as the L1 gain minus the L1_C/A correlation loss. All values are in decibels.

A.3.1.6 Figure of merit.
In a GPS signal distribution system, figure of merit is defined as G_e - $10\log_{10}T$, where G_e is the effective gain in decibels and T is the output noise temperature in Kelvins.

A.3.1.7 Group delay.
At any one frequency, group delay is defined as the local phase-frequency gradient between the system input and output in units of time.

A.3.1.8 Aircraft station GPS RF output.
The aircraft station GPS RF output is the store-mating interface of the aircraft as depicted in FIGURE A-1.

A.3.1.9 L1_P(Y) signal.
The L1_P(Y) signal is the $L1_P$ carrier component of L1, bi-phase shift key (BPSK) modulated by the P(Y) code plus data bit stream, as described in STANAG 4294.

A.3.1.10 L2_P(Y) signal.
The L2_P(Y) signal is the L2 carrier, bi-phase shift key (BPSK) modulated by the P(Y) code plus data bit stream, as described in STANAG 4294.

A.3.1.11 L1_C/A signal.
The L1_C/A signal is the $L1_C$ carrier component of L1, bi-phase shift key (BPSK) modulated by the C/A code plus data bit stream, as described in STANAG 4294.

A.3.2 Acronyms and abbreviations.

dBic	decibels relative to an ideal, circularly-polarised isotropic antenna
dBK^{-1}	decibels above 1 $Kelvin^{-1}$
P(Y)	GPS precision code, P or Y, as defined in STANAG 4294
C/A	GPS coarse/acquisition code as defined in STANAG 4294
K	Kelvins
SV	space vehicle (GPS satellite)
G_e	effective gain
T	noise temperature in Kelvins

A.4. GENERAL REQUIREMENTS

A.4.1 Aircraft/store configurations.

This appendix provides for the interface configurations depicted in FIGURE A- 1 by specifying requirements that are measurable at the aircraft station GPS RF output and the mission store interface (MSI).

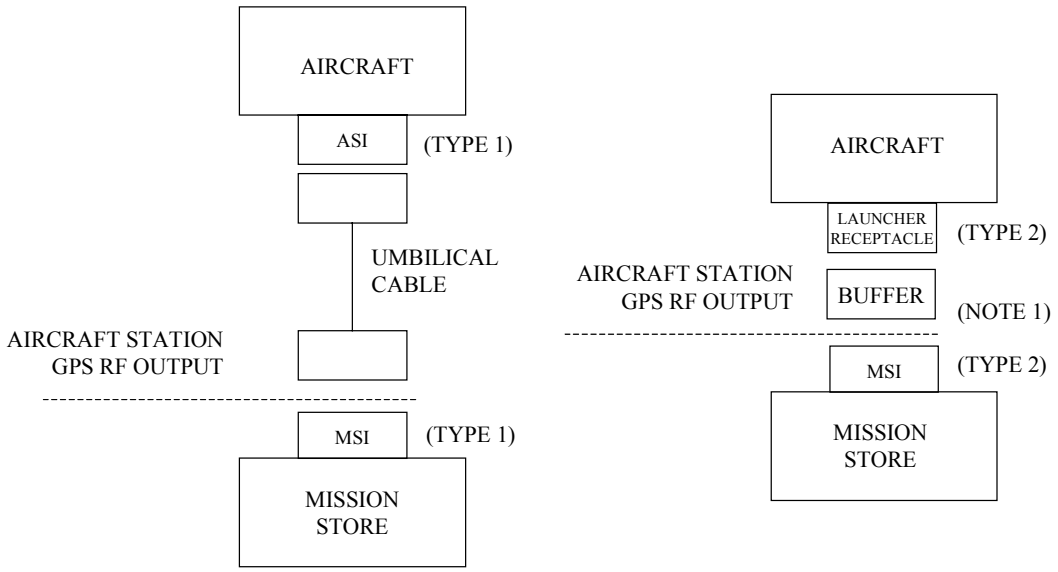

Note 1: The buffer must meet the electrical performance characteristics of MIL-DTL-83538A

FIGURE A- 1. GPS RF Interface configurations.

A.4.2 GPS RF signal requirements.

Antenna-received GPS RF signals shall be transferred to the mission store over the High Bandwidth 1 (HB1) Type B interface. The aircraft shall transfer L1_P(Y), L2_P(Y) and L1_C/A signals. The user-received GPS RF signal levels and SV viewing angle limits that the aircraft is required to be compatible with for the purposes of this appendix shall be defined in the aircraft system specification or similar document.

A.5. AIRCRAFT REQUIREMENTS

The aircraft shall meet the following requirements at each aircraft station GPS RF output. These requirements apply with the interfaces terminated by the proper nominal impedance (50 ohms) and include the effect of the applicable mating contacts. Requirements shall apply over the frequency ranges: L1 ± 10.23 MHz for L1_P(Y), L2 ± 10.23 MHz for L2_P(Y) and L1 ± 1.023MHz for L1_C/A except where indicated.

A.5.1 Voltage standing wave ratio (VSWR).
At each store station the maximum VSWR shall not exceed 2:1 at the L1 and L2 frequencies.

A.5.2 Effective gain.
At each GPS RF output the effective gain (A.3.1.5) shall meet the following requirements, where 0dBic is defined as the gain of an ideal isotropic right-hand circularly polarized antenna.

L1_P(Y) +9.0 dBic (min) to +30.5 dBic (max)

L2_P(Y) +7.0 dBic (min) to +28.0 dBic (max)

L1_C/A +9.0 dBic (min) to +33.0 dBic (max)

A.5.3 Group delay.
The aircraft shall provide the nominal group delay at the L1 and L2 frequencies from the aircraft antenna phase center to each aircraft station GPS RF output. The value for each output is provided in the applicable system specification of ICD.

A.5.4 Group delay uncertainty.
The maximum group delay uncertainty shall be within ±35 ns at the L1 and L2 frequencies with respect to the nominal group delay.

A.5.5 Figure of Merit.
The minimum figure of merit shall meet the following requirements.

L1_P(Y) -35 dBK^{-1}

L2_P(Y) -35 dBK^{-1}

L1_C/A -45 dBK^{-1}

A.5.6 Signal path dc offset.
The maximum dc offset shall not exceed ± 250 millivolts when the output is terminated by an ideal 50 ohm load. The aircraft shall meet the requirements of A.5.1 through A.5.5 herein with any store imposed dc offset of ± 500 millivolts.

A.6. MISSION STORE REQUIREMENTS
The mission store shall meet the following requirements at the MSI for the interface configurations depicted in FIGURE A- 1. These requirements apply with the interfaces terminated by the proper nominal impedance (50 ohms) and include the effect of the applicable mating contacts. Requirements shall apply over the frequency ranges: L1 ± 1.023 MHz and L2 ± 1.023 MHz except where indicated.

A.6.1 Voltage standing wave ratio (VSWR).
The maximum VSWR shall not exceed 2:1 at the L1 and L2 frequencies.

A.6.2 Signal power.
The mission store shall be compatible with the following signal power levels.

L1_P(Y) -155.0 dBW (min) to -119.5 dBW (max)

L2_P(Y) -160.0 dBW (min) to -122.0 dBW (max)

L1_C/A -152.0 dBW (min) to -117.0 dBW (max)

A.6.3 Signal to noise ratio.

The mission store shall be compatible with the following minimum signal to noise ratios.

L1_P(Y)	-42.5 dB
L2_P(Y)	-45.5 dB
L1_C/A	-39.5 dB

A.6.4 Signal path dc offset.

The maximum dc offset generated by the mission store shall not exceed ± 500 millivolts when the input is terminated by an ideal 50 ohm source. The mission store shall meet the requirements of A.6.1 through A.6.3 herein with any aircraft imposed dc offset of ± 250 millivolts.

This page intentionally blank.

DIGITAL DATA BUS COMMUNICATION RULES AND MESSAGE REQUIREMENTS

APPENDIX B

B.1 SCOPE

B.1.1 Purpose.

This appendix shall be used to establish requirements on aircraft and stores for message formatting, data encoding, information transfer rules, timing, and other characteristics required for using the digital data bus interface of the AEIS.

B.2 APPLICABLE DOCUMENTS

B.2.1 References.

The documents referenced in this appendix are not intended to be applied contractually.

B.2.2 Government documents.

STANDARDS

Military

MIL-STD-1553B Not. 4	Aircraft Internal Time Division Command/Response Multiplex Data Bus NOTE: Revision B Notice 4 is specifically required.

HANDBOOKS

Military

MIL-HDBK-1553	Multiplex Application Handbook

(Unless otherwise indicated, copies of federal and military specifications, standards, and handbooks are available from the Standardization Document Order Desk, 700 Robbins Avenue, Building 4D, Philadelphia, PA 19111-5094, phone (215) 697-2179 or http://assist.daps.dla.mil/quicksearch/ or http://www.dodssp.daps.mil/.)

B.2.3 Other Government documents, drawings, and publications.

DEFENSE MAPPING AGENCY

WGS-84	Department of Defense World Geodetic System 1984

(Application for copies should be addressed to the Public Affairs Officer, Defense Mapping Agency Hydrographic/Topographic Center, Washington DC 20315-0030.)

AMAC Standard

Aircraft Monitor and Control Project Officers Group System 2 specification:standard no. SYS 2001-01.

(Application for copies should be addressed to SA-ALC/NWIA, 1651 1st S E, Kirtland AFB NM 87117-5617.)

B.2.4 Non-Government publications.

B.2.4.1 AMERICAN NATIONAL STANDARDS INSTITUTE

ANSI X3.4 Code for Information Interchange

(Application for copies should be addressed to the American National Standards Institute, Inc, 1430 Broadway, New York NY 10018.)

B.2.4.2 INTERNATIONAL STANDARDS ORGANIZATION

ISO 3166 Codes for the Representation of Names of Countries

(Application for copies should be addressed to the International Organization for Standardization, 1, rue de Varembe, Geneve, Switzerland or http://iso.ch/iso/en/ISOOnline.openerpage.)

B.2.4.3 SOCIETY OF AUTOMOTIVE ENGINEERS

SAE-AS15531 Digital Time Division Command/Response Multiplex Data Bus

(Copies of SAE documents may be obtained from: Society of Automotive Engineers, Inc., 400 Commonwealth Dr., Warrendale, PA 15096-0001, phone (412) 776-4841 or http://www.sae.org/misc/store.htm)

B.3 DEFINITIONS

B.3.1 Definitions.

The following definitions, in addition to those in section 3.0, apply to this appendix.

B.3.1.1 Data entity.

A data word which is encoded to represent specific information and which uses a defined data word format.

B.3.1.2 Data set.

A group of data entities that are useful when taken together and are contained in a single message or group of messages.

B.3.1.3 Data validity.

The condition in which the information encoded in the designated data word is sufficiently accurate for the application intended.

B.3.1.4 Mass data transfer.

Mass data transfer refers to the transfer of data sets between aircraft and stores (or between stores) where the data set consists of more data words than can be transferred with only a few messages. Each data set is defined as a file. The protocol handles up to 255 files. Mass data transfer is implemented through the use of Transfer Control, Transfer Monitor, and Transfer Data messages.

B.3.1.4.1 Back-to-back transfer.

Back-to-back transfer is defined as a mass data transfer operation in which data blocks (for either the same record or for different records or files) are moved between aircraft and store through separate Transmit Data messages (with different subaddresses) with minimum intermessage gap. Back-to-back transfer is typically used to reduce the time required for transferring large files.

B.3.1.4.2 Block.
A block is a record subset which can be transferred with one message transaction (BC-RT, RT-BC, or RT-RT). A block contains 29 (or 28 if the optional checksum word is used) sixteen bit words of file data. Blocks which do not contain file data in all 28 or 29 words are zero filled to complete the 29 word field. The 29 word field may include error detection word(s) in addition to file data.

B.3.1.4.3 Download.
Download is defined as the process of transferring files into a store.

B.3.1.4.4 File.
A file is a set of data related to specific information such as an operational flight program, a test or maintenance program, mission data, bit patterns for memory test, etc. A file contains 1 to 255 data records.

B.3.1.4.5 Record.
A record is a data subset containing 1 to 255 data blocks which when combined with other records forms a file.

B.3.1.4.6 Upload.
Upload is defined as the process of transferring files out of the store.

B.3.1.4.7 Buffer.
To initially locate or relocate in memory such that a subsequent mass data transfer does not overlay data received on a previous mass data transfer. It is also used to denote the storage memory that mass data transfer occupies.

B.3.2 Acronyms and abbreviations.
The acronyms and abbreviations in section 3.0 of the basic document apply to this appendix.

B.4 REQUIREMENTS

B.4.1 Communication rules.
The data bus inteface shall comply with the requirements of MIL-STD-1553 with the additional requirements defined herein. The aircraft shall be responsible for the bus controller function for the ASI. The mission store shall provide the remote terminal function at the MSI. The carriage store shall provide the remote terminal function at the CSI and be responsible for the bus controller function at the CSSI. SAE-AS15531 may be used in lieu of MIL-STD-1553.

B.4.1.1 Command word.
Command words shall be as defined by MIL-STD-1553. All command words shall be generated by an AEIS bus controller.

B.4.1.1.1 Remote terminal address field.
The remote terminal address field shall be used to address the required store. If broadcast is implemented, then the broadcast address shall be in accordance with MIL-STD-1553.

B.4.1.1.2 Subaddress/mode field.
The subaddress/mode field shall be used for message identification and as a mode code indicator as defined in TABLE B- I.

B.4.1.1.3 Mode commands.
Aircraft and stores shall implement mode commands as defined herein. Aircraft and stores shall use a subaddress of 11111 (binary) as a mode code indicator. Stores shall also use subaddress 00000 (binary) as a mode code indicator.

B.4.1.1.3.1 Mandatory mode commands.
Stores shall implement the mode commands as specified in B.4.1.1.3.1.1 through B.4.1.1.3.1.7. Aircraft shall, as a minimum, implement the mode commands specified in B.4.1.1.3.1.5 and B.4.1.1.3.1.6. If the aircraft uses the other mode commands defined in B.4.1.1.3.1.1 through B.4.1.1.3.1.7, the implementation shall comply with these specified requirements.

B.4.1.1.3.1.1 Transmit status word.
Stores shall implement and respond to valid transmit status word mode codes as required by MIL-STD-1553.

B.4.1.1.3.1.2 Transmitter shutdown.
Stores shall implement and respond to valid transmitter shutdown mode codes as required by MIL-STD-1553. The shutdown transmitter shall not generate any bus activity until the mode code is overridden by either an override transmitter shutdown mode code or a reset remote terminal mode code received on the non-shutdown bus.

B.4.1.1.3.1.3 Override transmitter shutdown.
Stores shall implement and respond to valid override transmitter shutdown mode codes as required in MIL-STD-1553 and B.4.1.1.3.1.2.

B.4.1.1.3.1.4 Reset remote terminal.
Stores shall implement and respond to valid reset remote terminal mode codes as required by MIL-STD-1553. Receipt of this mode code shall re-enable all shutdown transmitters. The remote terminal is the only element that shall be reset; the subsystem shall be unaffected.

B.4.1.1.3.1.5 Transmit vector word.
Stores shall implement and respond to valid transmit vector word mode codes as required by MIL-STD-1553. The associated data word formats shall be as specified by TABLE B- II and TABLE B- III. The aircraft shall issue transmit vector word mode codes during the request servicing process defined in B.4.1.5.5.

B.4.1.1.3.1.6 Synchronize with data word.
Stores shall implement and respond to valid synchronize with data word mode codes as required by MIL-STD-1553. The synchronize with data word format shall use the TIME (L) format as defined in TABLE B-XXVII.

B.4.1.1.3.1.7 Transmit last command.
Stores shall implement and respond to valid transmit last command mode codes as required by MIL-STD-1553.

B.4.1.1.3.2 Prohibited mode commands.
Aircraft shall not transmit the dynamic bus control mode command, nor any of the reserved mode codes designated in MIL-STD-1553, nor any mode code not defined in MIL-STD-1553. If a store receives a prohibited mode command, the store shall not alter the state of the store subsystem.

B.4.1.1.3.3 Permitted mode commands.
Stores may implement mode commands not defined as mandatory or prohibited. Stores implementing the inhibit terminal flag bit mode command shall implement the override inhibit terminal flag bit mode command. No store or aircraft shall require for operation that an aircraft or store implement a permitted mode command.

B.4.1.2 Status word.
The status word shall be as defined by MIL-STD-1553. The status word bits at bit times 10, 12, 13, 14, and 18 shall be set to a logic zero. Bit time 10 shall not be used by a terminal, in conjunction with a logic 1 in bit time 10 of the command word, to distinguish between a command word and a status word. The message error and broadcast command received bits shall be used as defined in MIL-STD-1553. The service request, busy, subsystem flag, and terminal flag bits shall be used as defined herein.

B.4.1.2.1 Service request bit.
The status word bit at bit time 11 shall be used only for request notification as specified in B.4.1.5.4.

B.4.1.2.2 Busy bit.
The status word bit at bit time 16 shall be set to logic 1 only to notify that the RT is unable to move data to or from the store subsystem in compliance with a command. The busy bit shall only be set temporarily to a logic 1 and shall comply with B.4.1.5.3. The busy bit shall be the only indication that a message has thus been discarded and no additional notification shall be implemented.

B.4.1.2.3 Subsystem flag bit.
The status word bit at bit time 17 shall be used to indicate the presence of fault condition(s) within the store or store-to-terminal interface which destroys the credibility of data words at the data bus interface. The bus controller shall interpret the subsystem flag bit as a total loss of store function. A logic zero shall indicate the absence of such an aforementioned store fault.

B.4.1.2.4 Terminal flag bit.
The status word bit at bit time 19 shall be set to logic 1 only to indicate a detected fault in the RT hardware. Stores not implementing the inhibit terminal flag bit mode command as specified in B.4.1.1.3.3 shall set the terminal flag bit only if the fault is in that portion of the redundant RT to which the preceding command was sent. Stores detecting an interface address discrete error shall not interpret that error as a RT hardware fault.

B.4.1.3 Data words.
Data words shall comply with MIL-STD-1553 and shall be sequenced and formatted as specified in B.4.2.

B.4.1.4 Internal state change.
Stores shall not change the store subsystem state as a direct result of receiving a transmit command nor as a direct result of receiving a receive command. In other words, store state changes shall occur when the contents of a receive message command a state change and shall not change because a receive message was only detected.

B.4.1.5 Protocol execution.

B.4.1.5.1 Protocol checks.
Protocol checks shall include the following verifications. Any message that fails any one of them shall be discarded.

a. Verification of checksum, if implemented.

b. Verification of message header.

c. For the store control message, verification of the critical control 1, critical control 2, and critical authority words shall be as follows:

(1) For a critical control 1 or critical control 2 word not marked invalid, both the IDENTIFIER and ADDRESS CONFIRM fields must be correct. The invalidity, critical control 1, and critical control 2 words are defined in TABLE B- XXXI, TABLE B- XXXII, and TABLE B- XXXIII respectively.

(2) For the critical authority word, the CODED CHECK field must be correct. The critical authority word is defined in TABLE B- XXXIV.
Detected errors in protocol checks shall be reported in accordance with B.4.2.2.2.

B.4.1.5.2 Checksum requirement.
The use of checksums for the standard data messages specified in B.4.2.2.1, B.4.2.2.2, B.4.2.2.3, B.4.2.3.2.1.8 and B.4.2.3.2.2.9 are mandatory. The use of checksums for all other messages is optional and determined by the store. When used, the checksum shall occupy the last word position of both receive and transmit messages and shall be formatted as specified in B.4.1.5.2.1. When not used, the last word position shall be a data entity.

B.4.1.5.2.1 Checksum algorithm.
All checksummed messages shall include a checksum word which satisfies the following algorithm: When each data word (including the checksum word) of a message is rotated right cyclically by a number of bits equal to the number of preceding data words in the message, and all the resultant rotated data words are summed using modulo 2 arithmetic to each bit (no carries), the sum shall be zero. The following are examples of messages satisfying the checksum algorithm.

EXAMPLE (a):	FOUR WORD MESSAGE	
1st Word	0000-0000-0000-0001 (0001 hex.)	data
2nd Word	1100-0000-0000-0000 (C000 hex.)	data
3rd Word	0000-1111-0000-0000 (0F00 hex.)	data
4th Word	0001-1110-0000-1011 (IE0B hex.)	checksum word
EXAMPLE (b):	SIX WORD MESSAGE	
lst Word	0001-0010-0011-0100 (1234 hex.)	data
2nd Word	0101-0110-0111-1000 (5678 hex.)	data
3rd Word	1001-1010-1011-1100 (9ABC hex.)	data
4th Word	1101-1110-1111-0000 (DEF0 hex.)	data
5th Word	0000-0000-0000-0000 (0000 hex.)	data
6th Word	1000-1111-0010-0000 (8F20 hex.)	checksum word

B.4.1.5.3 Execution time.
If a store is to reject further messages while executing protocol checks on a previous received message, the store shall set the busy bit in the status word. The busy bit may only be set for the time specified in B.4.1.5.3.2 and only when one or more of the following criteria are met.

a. Acceptance of a valid initiate RT self test or reset RT mode command as specified in MIL-STD-1553.

b. Acceptance of a valid receive command (including synchronize with data word mode command).

c. During the initialization sequence of 5.2.2, or as a consequence of store fault or failure resulting in the inability of the RT to move data to or from the subsystem.

B.4.1.5.3.1 Aircraft compatibility.
The aircraft shall be compatible with this execution time and busy bit application for store operation.

B.4.1.5.3.2 Busy time.
Busy time is the duration for which the busy bit is set to logic 1. The maximum busy time following the receipt of a valid initiate RT self test mode command or valid reset RT mode command shall comply with MIL-STD-1553. The maximum busy time following power application (ac, dc, or both, as required by the store) shall not exceed 500 milliseconds. The maximum busy time for all other allowed busy conditions shall not exceed 50 microseconds.

B.4.1.5.3.3 Busy time measurement.
Busy time shall be the time measured from the zero crossing of the parity bit of the last word of the previous message to the zero crossing of the first command word sync which is accepted and whose status response has the busy bit set to logic 0.

B.4.1.5.4 Service request notification.
Service request notification, if implemented by stores, shall be accomplished by setting the service request bit in the status word to a logic 1. Stores shall ensure that once the service request bit is set to logic 1, the vector word as defined in B.4.1.1.3.1.5 is immediately available. The service request bit shall be reset to logic 0 when, and only when, the store has received the transmit vector word mode command for the active service request and the vector word has been transmitted.

B.4.1.5.4.1 Additional request for service.
All requests for servicing shall be covered by the one service request notification. The vector word shall contain all the data concerning the request(s) for servicing indicated by the setting of status word bit time 11. However, if further request for servicing occurs after status word bit time 11 has been set, then that additional request for servicing shall be treated as a new arising and shall not be actioned by the store until the current service request has been completely dealt with. Stores shall not use multiple settings of status word bit time 11 to avoid packing of more than one service request into the vector word demand.

B.4.1.5.5 Request servicing.
The aircraft shall interpret the receipt of a store status word with service request bit set to logic 1 as a request for a transmit vector word mode command. If, however, the service request bit is still set to a logic 1 in a second or subsequent response to the same service request, the service request bit shall be disregarded by the aircraft. The aircraft shall extract information from the store on the service request details by sending a transmit vector word command to the store. Acknowledgment of receipt of a valid vector word shall not be a requirement on the aircraft.

B.4.1.5.6 Vector word demand.
The store shall maintain the current contents of the vector word until a subsequent and different valid command has been received after receiving a transmit vector word mode command. When specified in the system specification or Interface Control Document (ICD), the store shall also maintain the current contents of any subaddress notified in the vector word until the requested data transaction has occurred and a subsequent and different valid command has been received.

B.4.1.5.7 General form of service request routine.
The general form of a complete service request routine is shown in FIGURE B- 1.

B.4.1.5.8 Mass data transfer.
Applications which require transfer of large data files through the AEIS interface shall use the applicable options of the mass data transfer procedure and messages defined in B.4.2.3.

B.4.1.5.9 Carriage store routing.
A procedure for the transfer of data through a carriage store (routing) is not defined in this standard except as required by paragraph 5.1.2.1 d.

B.4.1.5.10 Data consistency.
The aircraft and store shall ensure that messages transmitted over the bus contain only mutually consistent samples of information. Different words in a message used to transmit multiple precision parameters shall all be members of the same set.

B.4.1.5.11 Broadcast.
Aircraft and stores are not required to implement broadcast. However, if implemented, then aircraft and stores shall comply with the following paragraphs.

B.4.1.5.11.1 Broadcast restricted subaddresses.
The bus controller shall not issue a broadcast command to the subaddresses given below.

SUBADDRESS	TRANSMIT*	RECEIVE
00001 (01)	x	
01000 (08)	x	x
01011 (11)	x	x
10011 (19)	x	x
11011 (27)	x	x
11110 (30)	x	

* The transmit column applies only to the transmitting remote terminal in RT-to-RT transfers.

B.4.1.5.11.2 Broadcast verification.
The bus controller and stores which use broadcast shall implement some error detection scheme to determine that broadcast messages were received correctly unless it is determined that errors in the data being broadcast are not significant to system performance.

B.4.1.5.11.3 Broadcast command received bit.
Stores shall implement the broadcast command received bit in the status word.

B.4.1.5.11.4 Stores compatibility with non-broadcast.
A store which accepts broadcast messages shall also accept the same data in non-broadcast mode, i.e., it will work with an aircraft or carriage store that does not do broadcast.

B.4.1.5.12 Time tagging. [Note 29.]
Applications which require precision time referencing of transmit or receive data entities transferred between the aircraft and the store through the AEIS shall use the time tagging protocol defined in B.4.2.4.

B.4.2 Message requirements.

Aircraft and stores shall use the standard message formats specified in B.4.2.2 and the mass data transfer formats specified in B.4.2.3, as applicable. Safety critical data shall only be transferred in the standard message formats of B.4.2.2.1, B.4.2.2.2, B.4.2.2.4, and B.4.2.2.5. All messages required by a store which are not defined in B.4.2.2 or B.4.2.3 shall:

a. employ the base message format specified in B.4.2.1, and
b. use subaddresses selected in accordance with B.4.1.1.2.

B.4.2.1 Base message data format.
All messages not covered by B.4.2.2 or B.4.2.3 shall use the base message format. The general format is shown in TABLE B- VII, TABLE B- VIII, and TABLE B- IX. Messages to/from carriage stores may be of any length up to the maximum of 32 data words. Messages to/from mission stores shall not exceed 30 data words and if routed via a carriage store shall not exceed 30 data words when output at, or input to, the.

B.4.2.1.1 Data word 1.
The first word of the message shall be a HEADER word for message identification. The HEADER word shall be a hexadecimal code which complies with TABLE B- X and TABLE B- XLII.

B.4.2.1.2 Data words 2-32 and 2-30.
Data words 2-32 are available for the transfer of up to 31 words of carriage store message data which may include a checksum. Data words 2-30 are available for the transfer of up to 29 words of mission store message data which may include a checksum.

B.4.2.2 Standard messages.
Standard AEIS messages are defined as standard message data formats for safety critical control and monitor functions of conventional and nuclear weapons and for store descriptions. A receive message is defined as the data word or words received by a store in conjunction with a receive command word and the status word response. A transmit message is defined as the status word and data word or words transmitted by a store resultant from a transmit command word.

B.4.2.2.1 Store control.
The store control standard message shall be used for controlling the state of stores and specifically standardizes the format for safety critical commands. Aircraft shall be capable of issuing this message to the appropriate stores. Stores which require any of these safety critical commands shall implement this message. The store control message shall be a 30 data word receive message with a subaddress of 11 (decimal) and formatted as specified in TABLE B- XI.

B.4.2.2.2 Store monitor.
The store monitor standard message shall be used as a statusing message to reflect the safety critical condition of the store. The message also includes other non-safety critical store condition information. Aircraft shall be capable of issuing a transmit store monitor command and receiving the resulting monitor message response from the store. Stores shall be capable of responding to a transmit store monitor command with the required status and data words. The store monitor message shall be a 30 data word transmit message with subaddress 11 (decimal) and formatted as specified in TABLE B- XII.

B.4.2.2.3 Store description.
The store description standard message transfers store identity from the store to the aircraft. The store description message shall use subaddress 1 (decimal) and comply with the format of TABLE B- XIII. The message includes a header word, country code word, store identification words, maximum interruptive BIT time word, store configuration identifier words, and a checksum word. The country code (see TABLE B- XIV) and store identification codes shall remain invariant through the life of the store or until modification to the store justifies a new store identity. The store identifier shall be either a binary code in accordance with TABLE B- XV, or an ASCII code in accordance with TABLE B- XVI, or both. The aircraft has the option of verifying or not verifying that the message passes the checksum test.

B.4.2.2.4 Nuclear weapon control.
Receive messages with a subaddress field of 19 and 27 (decimal) shall only be used for control of nuclear weapons. For all aircraft applications, usage of these subaddresses shall comply with the Aircraft Monitor and Control Project Officers Group System 2 specification: standard no. SYS 2001-01.

B.4.2.2.5 Nuclear weapon monitor.
Transmit messages with a subaddress field of 19 and 27 (decimal) shall only be used for monitor of nuclear weapons. For all aircraft applications, usage of these subaddresses shall be in compliance with the Aircraft Monitor and Control Project Officers Group System 2 specification: standard no. SYS 2001-01.

B.4.2.2.6 Aircraft description.
The aircraft description standard message transfers aircraft identity from the aircraft to the store. The aircraft description message shall use subaddress 1 (decimal) and comply with the format of TABLE B- XLVII. The message includes a header word, invalidity words, a country code word, aircraft identification words, a station number, a pylon/bay identity and a checksum word. The country code (see TABLE B- XIV) and aircraft identification codes shall remain invariant through the life of the aircraft or until modification to the aircraft justifies a new aircraft identity. The aircraft identifier shall be an ASCII code in accordance with TABLE B- XVI. The store has the option of verifying or not verifying that the message passes the checksum test. The aircraft description message shall only be used with prior agreement via the system specification or interface control document.

B.4.2.3 Mass data transfer messages.
Aircraft and stores which require Mass Data Transfer (MDT) operations shall use the applicable operations defined herein. MDT shall be implemented through the use of three data message types. The Transfer Control (TC) message (B.4.2.3.2.1) is a standard receive message for controlling the transfer operating modes and designation of file, record, and block numbers. The Transfer Monitor (TM) message (B.4.2.3.2.2) is a standard transmit message for monitoring the status of the mass data transfer operations in the store. The Transfer Data (TD) message (B.4.2.3.2.3) is a standard transmit, or standard receive, message for transferring the file data blocks between aircraft and stores (or between stores). The system specification or interface control document defines the applicable operations, specific data files, and file data formats to be transferred using the MDT protocol.

B.4.2.3.1 File Structure.
Each selected file (Sf) to be transferred using the MDT protocol shall be divided into 1 to 255 consecutive records (Nr) with each record divided into 1 to 255 consecutive blocks (Nb). Each block is transferred with a single TD message and shall contain 30 words with word one being the record/block number and the remaining 29 words used for file data (see B.4.2.3.2.3.2 and B.4.2.3.2.3.3). All records within a specific file shall contain the same number of blocks. Unused words in each record shall be zero-filled.

B.4.2.3.2 Message formats.

B.4.2.3.2.1 Transfer Control (TC) message.
The TC message shall be sent as a receive message to subaddress 14 and formatted in accordance with TABLE B- XVII. The aircraft shall set the TC message in accordance with the following requirements.

B.4.2.3.2.1.1 TC message - header word.
The aircraft shall set this word in accordance with paragraph B.4.2.1.1.

B.4.2.3.2.1.2 TC message - instruction word.
This word shall be formatted in accordance with TABLE B- XVIII and the INSTRUCTION TYPE field shall be set to one of the valid bit combinations of TABLE B- XIX. If the aircraft requires the store to enable the echo of the TD message (TABLE B- XXIV) to the aircraft then the aircraft shall set bit 07 to logic 1, else bit 07 shall be set to logic zero. If the format of the Sf data being transferred to/from the store includes an embedded message checksum in word 30 of every TD message, the aircraft shall set bit 12 to logic 1, else bit 12 shall be set to logic zero.

B.4.2.3.2.1.3 TC message - subaddress select word.
This word shall be formatted in accordance with TABLE B- XX. The aircraft shall set this word to 0000 Hex for all bit combinations in TABLE B- XIX except 1, 3, and 10. For bit combination 1, if the aircraft requires the store to update the status of the TM message for a TD message sent to a particular subaddress, the aircraft shall set this word to the subaddress for the TD message it requires the status of, else this word shall be set to 0000 Hex. For bit combination 3 or 10 of TABLE B- XIX, in applications where the store can use different subaddresses for file data transfer, this word shall be set to the receive/transmit subaddress for the TD message. The system specification or interface control document shall identify those subaddresses available for the TD messages and the number of different files, records, or blocks that can be transferred through those different subaddresses. As an alternative, the system specification or interface control document may pre-assign specific subaddresses to specific file, record, or block numbers and then the subaddress select word shall be set to 0000 hexadecimal, or to the applicable pre-assigned subaddress.

B.4.2.3.2.1.4 TC message - file number word.
The aircraft shall set the NUMBER A and NUMBER B fields (TABLE B- XXI) of word 04 of the TC message as follows. NUMBER A and NUMBER B are valid file numbers ranging from 1 through 255.

a. For TABLE B- XIX bit combination numbers 1, 2, 4, 9, and 14, NUMBER A = 00 Hex and NUMBER B = 00 Hex.

b. For TABLE B- XIX bit combination 3, NUMBER A = Nf to be downloaded and NUMBER B = the number of the Sf in which the current download operation will be executed.

c. For TABLE B- XIX bit combination 5, NUMBER A = 01 Hex and NUMBER B = the number of the Sf to be erased.

d. For TABLE B- XIX bit combination 6, NUMBER A = 01 Hex and NUMBER B = the number of the Sf in which the Sr will be erased.

e. For TABLE B- XIX bit combination 7, NUMBER A = 01 Hex and NUMBER B = the number of the Sf to be checksummed.

f. For TABLE B- XIX bit combination 8, NUMBER A = 01 Hex and NUMBER B = the number of the Sf in which the Sr will be checksummed.

g. For TABLE B- XIX bit combination 10, NUMBER A = Nf to be uploaded and NUMBER B = the number of the Sf in which the current upload operation will be executed.

h. For TABLE B- XIX bit combination 11, NUMBER A = 01 Hex and NUMBER B = the number of the Sf in which the checksum value is embedded that the store is required to authenticate against the file/record checksum word in this message.

I. For TABLE B- XIX bit combination 12, NUMBER A = 01 Hex and NUMBER B = the number of the Sf where the Sr is located, in which the checksum value is embedded that the store is required to authenticate against the file/record checksum word in this message.

j. For TABLE B- XIX bit combination 13, NUMBER A = 00 Hex and NUMBER B = the number of the Sf in which execution will start in download mode; In upload mode, set to 00 Hex.

B.4.2.3.2.1.5 TC message - record number word.
The aircraft shall set the NUMBER A and NUMBER B fields (TABLE B- XXI) of word 05 of the TC message as follows. NUMBER A and NUMBER B are valid file numbers ranging from 1 through 255.

a. For TABLE B- XIX bit combination numbers 1, 2, 4, 7, 9, 11, and 14, NUMBER A = 00 Hex and NUMBER B = 00 Hex.

b. For TABLE B- XIX bit combination number 3, NUMBER A = Nr for the Sf to be downloaded. The value of Nr will remain fixed for the Sf during the commanded operation. NUMBER B = the number of the Sr in which the current download operation will start.

c. For TABLE B- XIX bit combination number 5, NUMBER A = the Nr for Sf to be erased and NUMBER B = 01 Hex. The value of Nr will remain fixed for the Sf during the commanded operation.

d. For TABLE B- XIX bit combination number 6, NUMBER A = 01 Hex and NUMBER B = the number of the Sr to be erased.

e. For TABLE B- XIX bit combination number 8, NUMBER A = 01 Hex and NUMBER B = the number of the Sr to be checksummed.

f. For TABLE B- XIX bit combination 8, NUMBER A = 01 Hex and NUMBER B = the number of the Sf in which the Sr will be checksummed.

g. For TABLE B- XIX bit combination 10, NUMBER A = Nf to be uploaded and NUMBER B = the number of the Sf in which the current upload operation will be executed.

h. For TABLE B- XIX bit combination 11, NUMBER A = 01 Hex and NUMBER B = the number of the Sf in which the checksum value is embedded that the store is required to authenticate against the file/record checksum word in this message.

I. For TABLE B- XIX bit combination 12, NUMBER A = 01 Hex and NUMBER B = the number of the Sf where the Sr is located, in which the checksum value is embedded that the store is required to authenticate against the file/record checksum word in this message.

j. For TABLE B- XIX bit combination 13, NUMBER A = 00 Hex and NUMBER B = the number of the Sf in which execution will start in download mode; In upload mode, set to 00 Hex.

B.4.2.3.2.1.5 TC message - record number word.
The aircraft shall set the NUMBER A and NUMBER B fields (TABLE B- XXI) of word 05 of the TC message as follows. NUMBER A and NUMBER B are valid file numbers ranging from 1 through 255.

a. For TABLE B- XIX bit combination numbers 1, 2, 4, 7, 9, 11, and 14, NUMBER A = 00 Hex and NUMBER B = 00 Hex.

b. For TABLE B- XIX bit combination number 3, NUMBER A = Nr for the Sf to be downloaded. The value of Nr will remain fixed for the Sf during the commanded operation. NUMBER B = the number of the Sr in which the current download operation will start.

c. For TABLE B- XIX bit combination number 5, NUMBER A = the Nr for Sf to be erased and NUMBER B = 01 Hex. The value of Nr will remain fixed for the Sf during the commanded operation.

d. For TABLE B- XIX bit combination number 6, NUMBER A = 01 Hex and NUMBER B = the number of the Sr to be erased.

e. For TABLE B- XIX bit combination number 8, NUMBER A = 01 Hex and NUMBER B = the number of the Sr to be checksummed.

f. For TABLE B- XIX bit combination number 10, NUMBER A = Nr for the Sf to be uploaded and NUMBER B = the number of the Sr in which the current upload operation will start. The value of Nr will remain fixed for Sf during the commanded operation.

g. For TABLE B- XIX bit combination number 12, NUMBER A = 01 Hex and NUMBER B = the number of the Sr in which the checksum value is embedded that the store is required to authenticate against the file/record checksum word in this message.

h. For TABLE B- XIX bit combination number 13, NUMBER A = 00 Hex and NUMBER B = the number of the Sr of the Sf in which execution will start in download mode; in upload mode, set to 00 Hex.

B.4.2.3.2.1.6 TC message - block number word.
The aircraft shall set the NUMBER A and NUMBER B fields (TABLE B- XXI) of word 06 of the TC message as follows. NUMBER A and NUMBER B are valid file numbers ranging from 1 through 255.

a. For TABLE B- XIX bit combination numbers 1, 2, 4, 7, 8, 9, 11, 12, and 14, NUMBER A = 00 Hex and NUMBER B = 00 Hex.

b. For TABLE B- XIX bit combination number 3, NUMBER A = Nb for the Sr of the Sf to be downloaded and NUMBER B = the number of the Sb of the download operation which will be in the next TD message. The value of Nb will remain fixed for the Sr during the commanded operation.

c. For TABLE B- XIX bit combination number 5, NUMBER A = Nb of the Sr for the Sf to be erased and NUMBER B = 01 Hex. The value of Nb will remain fixed for the Sr during the commanded operation.

d. For TABLE B- XIX bit combination number 6, NUMBER A = Nb of the Sr for the Sf to be erased and NUMBER B = 01 Hex. The value of Nb will remain fixed for the Sr during the commanded operation.

e. For TABLE B- XIX bit combination number 10, NUMBER A = Nb of the Sr for the Sf to be uploaded and NUMBER B = the number of the Sb that the store will transmit in the next TD message. The value of Nb will remain fixed for the Sr during the commanded operation.

f. For TABLE B- XIX bit combination number 13, NUMBER A = 00 Hex and NUMBER B = the number of the Sb of the Sr of the Sf in which execution will start in download mode; in upload mode, set to 00 Hex.

B.4.2.3.2.1.7 TC message - file/record checksum word.
The aircraft shall set word 6 of the TC message as follows:

a. For TABLE B- XIX bit combination numbers 1, 2, 3, 4, 5, 6, 9, 10, 13, and 14, set to 0000 Hex.

b. For TABLE B- XIX bit combination number 7, either set to the checksum for the file as specified in paragraph B.4.2.3.4 or, if the checksum is embedded in the file/record data, this word shall be set to 0000 hexadecimal. If the checksum is embedded, the checksum algorithm shall be as specified in the system specification or interface control document.

c. For TABLE B- XIX bit combination number 8, either set to the checksum for the record as specified in paragraph B.4.2.3.4 or, if the checksum is embedded in the file/record data, this word shall be

set to 0000 hexadecimal. If the checksum is embedded, the checksum algorithm shall be as specified in the system specification or interface control document.

d. For TABLE B- XIX bit combination number 11, set to the aircraft calculated checksum for the uploaded file as specified in paragraph B.4.2.3.4. If the checksum is embedded in the file/record data, it shall be set as specified in the system specification or interface control document.

e. For TABLE B- XIX bit combination number 12, set to the aircraft calculated checksum for the uploaded record as specified in paragraph B.4.2.3.4. If the checksum is embedded in the file/record data, it shall be set as specified in the system specification or interface control document.

B.4.2.3.2.1.8 TC message - checksum word.
The aircraft shall provide the TC message checksum as required in paragraph B.4.1.5.2.

B.4.2.3.2.2 Transfer Monitor (TM) message.
The TM message shall be sent in a transmit message from subaddress 14 and formatted in accordance with TABLE B- XXII. The store shall set the TM message in accordance with the following requirements.

B.4.2.3.2.2.1 TM message - header word.
The store shall set this word in accordance with paragraph B.4.2.1.1.

B.4.2.3.2.2.2 TM message - last received instruction word.
The store shall set this word to the last instruction word (word 02) received in an error free TC message (TABLE B- XVIII).

B.4.2.3.2.2.3 TM message - transfer mode status word.
This word shall be formatted in accordance with TABLE B- XXIII and the MODE STATUS field shall be set to one of the valid bit combinations specified in
TABLE B- XXV to reflect the status of the stores last data transfer operation.

B.4.2.3.2.2.4 TM message - current selected subaddress word.
This word shall be set to the subaddress selected in the TC message (data word 03) or the subaddress in which the last TD message was received, whichever was last received by the store. If the store is requesting retransmission of a record or block, the store shall set this word to the subaddress the aircraft is to transmit the TD message to, unless the system specification or interface control document pre-assigns specific subaddresses to specific file, record, or block numbers, in which case, the store shall set this word to 0000 Hex.

B.4.2.3.2.2.5 TM message - current file number word.
The mission store shall format this data word in accordance with TABLE B- XXI. The NUMBER A field shall reflect the Nf designated in word 04 of the last valid TC message. The NUMBER B field shall reflect the current active Sf. The current active file number is defined as one of the following:

a. The number received in the NUMBER B field of the TC message File number word,

b. The number of the file on which the store is currently performing data transfer operations.

If the store sets the MODE STATUS field to bit combination 16 of
TABLE B- XXV the store shall set the NUMBER A field to 01 hex, and the NUMBER B field to the file number for which the retransmission of data is needed.

B.4.2.3.2.2.6 TM message - current record number word.
The mission store shall format this data word in accordance with TABLE B- XXI. The NUMBER A field shall reflect the total number of records (Nr) designated in word 05 of the last valid TC message for the current Sf. The NUMBER B field shall reflect the Sr. The current active record number is defined as one of the following

a. The number received in the NUMBER B field of the TC message Record number word,

b. The NUMBER A field of the record/block word of the last TD message received/transmitted, whichever was last processed.

If the store sets the MODE STATUS field to bit combination 16 of TABLE B- XXV the store shall set the NUMBER A field to the number of records for the Sf that are to be retransmitted, and the NUMBER B field to the record number for which the retransmission of data is to start.

B.4.2.3.2.2.7 TM message - current block number word.
The mission store shall format this data word in accordance with TABLE B- XXI. The NUMBER A field shall reflect the Nb designated in word 06 of the last valid TC message for the current active record number. The NUMBER B field shall reflect the current active Sb. The current active block number is defined as one of the following:

a. The number received in the NUMBER B field of the TC message block number word,

b. The NUMBER B field of the record/block word of the last TD message received/transmitted, whichever was last processed.

If the store sets the MODE STATUS field to bit combination 16 of TABLE B- XXV the store shall set the NUMBER A field to the number of blocks of the Sf of the Sr that are to be retransmitted, and the NUMBER B field to the block number for which the retransmission of data is to start.

B.4.2.3.2.2.8 TM message - current file/record checksum word.
Word 08 of the TM message shall be set to the current checksum calculated by the store for the current active file or current active record, as applicable. If no file or record checksum calculation has been commanded in the TC message, or if the commanded checksum calculation has not been completed, this word shall be set to 0000 hexadecimal. This word shall be reset to 0000 hexadecimal when bit 07 of the TM status word (TABLE B- XXIII) is reset.

B.4.2.3.2.2.9 TM message - checksum word position.
Word 09 of the TM message shall be set to the TM message checksum, calculated as required by paragraph B.4.1.5.2.

B.4.2.3.2.3 Transfer Data (TD) message.
The TD message shall comply with TABLE B- XXIV and with the following requirements. It shall be a 30 data word message received or transmitted in the subaddress specified in the TC message in accordance with paragraph B.4.2.3.2.1.3. The TD message subaddress assignment shall comply with the requirements specified as follows and in the store/aircraft system specification or ICD.

B.4.2.3.2.3.1 TD message - record/block number word.
This data word shall be formatted in accordance with TABLE B- XXI. In the download mode, the aircraft shall set the NUMBER A field of this word to Sr and the NUMBER B field of this word to Sb for the data in words 02-30 of the current TD message. If the aircraft requires a no-operation transaction of the TD message, it shall set the NUMBER B field to zero. Stores that receive a valid NUMBER A field and with a NUMBER B field set to zero shall discard the contents of this TD message and update the TM message (TABLE B- XXII) to reflect the status of the last TD message received at the current subaddress. Stores which receive a NUMBER A field set to zero, a non-initialized value, or a non-consecutive value from the last TC message, shall discard the contents of this message and shall not update the TM message.

In the upload mode, the store shall set the NUMBER A field of this word to the Sr and the NUMBER B field of this word to the Sb for the data in words 02-30 of the current TD message. After each TD transmission, the store shall increment the Sb starting with the Sb specified in the NUMBER B field of the block number word of the last valid TC message, until the Nb specified in the NUMBER A field of the block number word of the last valid TC message are transferred, or until a new TC message is received. The store shall increment the record number, starting with the record number specified as the Sr in the NUMBER B field of record number word of the last valid TC message, each time Nb (NUMBER B field of this word) roles over to 01 Hex, or until the Nr specified in the NUMBER A field Nr of the last valid TC message are transferred, or until a new TC message is received.

B.4.2.3.2.3.2 TD message - file data words.
In download mode the aircraft shall fill these words with either 29 words of the operational file data, or sufficient words set to 0000 Hex to complete filling the fixed length 30 word TD message. In upload

mode the store shall fill these words with either words from the Sf data, or sufficient words set to 0000 Hex to complete filling the fixed length 30 word TD message. The file data shall be placed in memory by the receiving system such that word 02 shall be placed in memory location N, word 03 is placed in memory location N+1, and so forth to complete the 29 word block transfer. The value of N shall be determined by Sf, Sr, and Sb.

B.4.2.3.2.3.3 TD message - file data words with message checksum option.
When in download mode, if bit 12 of the instruction word of the TC message is set to logic one, the aircraft shall fill the first word of the TD message with the record/block number word, the next 28 words with either words of the operational file data, or sufficient words set to 0000 Hex to complete filling the 28 words, and set word 30 to the checksum for the TD message.

When in upload mode, if bit 12 of the instruction word of the TC message is set to logic one, the store shall fill the first word of the TD message with the record/block number word, the next 28 words with either words from the Sf data, or sufficient words set to 0000 Hex to complete filling the 28 words, and set word 30 to the checksum for the TD message. The file data shall be placed in memory by the receiving system such that word 02 shall be placed in memory location N, word 03 is placed in memory location N+1, and so forth to complete the 28 word block transfer. The value of N shall be determined by the Sf, Sr, and Sb. The checksum for the TD message shall be as specified in paragraph B.4.2.3.4.

B.4.2.3.3 MDT file/record checksum.
The checksum value for downloaded MDT files or records is provided in the TC message which commands a file or record checksum. The checksum value for uploaded MDT files or records is provided in the TM message after completion of the file or record upload.

File/record checksums shall be computed in accordance with the algorithm described in paragraph B.4.1.5.2., except that no cyclical right rotation of the MDT checksum word shall be performed since it is not a part of the downloaded/uploaded data. The MDT file/record checksum word provides a zero result using modulo 2 arithmetic to each bit (no carries) when summed with all TD message words (including TD message word 01) downloaded/uploaded (for designated file or record) after having been rotated right cyclically by a number of bits equal to the number of preceding data words in the TD message in which the data word was received.

B.4.2.3.4 Modes of operation.

B.4.2.3.4.1 Download mode.
The operating procedure for downloading data files from the aircraft to the store shall consist of the following steps. If the store response time to the MDT commands (TC instruction word TABLE B- XVIII) is required by the aircraft, it shall be documented in the system specification or interface control document.

B.4.2.3.4.1.1 Initiation of download mode.
To initiate the download mode:

a. Aircraft Requirements: The aircraft shall send a TC message (TABLE B- XVII) to the store set in accordance with paragraph B.4.2.3.2.1 with the INSTRUCTION TYPE field of the instruction word set to bit combination 2 of TABLE B- XIX. The aircraft shall not proceed with the MDT process until the store response indicates it is “in download mode” (TM status TABLE B- XXIII).

b. Store requirements: The store shall enter the download mode and set the TM message (TABLE B- XXII) in accordance with paragraph B.4.2.3.2.2 with the MODE STATUS field of the transfer mode status word (TABLE B- XXIII) set to bit combination 1 of TABLE B- XXV.

B.4.2.3.4.1.2 Erasure of all MDT files.
The aircraft has the option to not erase previously loaded MDT data or to command the mission store to erase all files, a specific file or a specific record space. For erasure of all MDT file data:

a. Aircraft Requirements: The aircraft shall send a TC message (TABLE B- XVII) to the store set in accordance with paragraph B.4.2.3.2.1 with the INSTRUCTION TYPE field of the instruction word set to

bit combination 4 of TABLE B- XIX. The aircraft shall not proceed with the MDT process until the store response indicates “Erase Completed” (TM status TABLE B- XXIII).

b. Store requirements: The store shall initiate erasure of all MDT file memory locations and shall set the TM message (TABLE B- XXII) in accordance with paragraph B.4.2.3.2.2 with the MODE STATUS field of the transfer mode status word (TABLE B- XXIII) set to bit combination 3 of TABLE B- XXV. After the store has erased all MDT memory, it shall set the TM message in accordance with paragraph B.4.2.3.2.2 with the MODE STATUS field of the transfer mode status word (TABLE B- XXIII) set to bit combination 4 of TABLE B- XXV.

B.4.2.3.4.1.3 Erasure of a specific MDT file.
The aircraft has the option to not erase previously loaded MDT data or to command the store to erase all files, a specific file or a specific record space. For erasure of a specific MDT data file:

a. Aircraft Requirements: The aircraft shall send a TC message (TABLE B- XVIII) to the store set in accordance with paragraph B.4.2.3.2.1 with the INSTRUCTION TYPE field of the instruction word set to bit combination 5 of TABLE B- XIX. The aircraft shall not proceed with the MDT process until the store response indicates “Erase Completed” (TM status TABLE B- XXIII).

b. Store requirements: The store shall initiate erasure of all memory locations of the Sf and shall set the TM message (TABLE B- XXII) in accordance with paragraph B.4.2.3.2.2 with the MODE STATUS field of the transfer mode status word (TABLE B- XXIII) set to bit combination 3 of TABLE B- XXV. The number of memory locations allocated to a Sf is defined as the product Nr * Nb * 29 where Nr and Nb are defined in words 05 and 06 (NUMBER A field) of the TC message that commanded the file erasure. After the store has erased Sf, it shall set the TM message in accordance with paragraph B.4.2.3.2.2 with the MODE STATUS field of the transfer mode status word (TABLE B- XXIII) set to bit combination 4 of TABLE B- XXV.

B.4.2.3.4.1.4 Erasure of a specific MDT record in a Sf.
The aircraft has the option to not erase previously loaded MDT data or to command the store to erase all files, a specific file or a specific record space. For erasure of a specific MDT record:

a. Aircraft Requirements: The aircraft shall send a TC message (TABLE B- XVII) to the store set in accordance with paragraph B.4.2.3.2.1 with the INSTRUCTION TYPE field of the instruction word set to bit combination 6 of TABLE B- XIX. The aircraft shall not proceed with the MDT process until the store response indicates “Erase Completed” (TM status TABLE B- XXIII).

b. Store requirements: The store shall initiate erasure of all memory locations of Sr of Sf and shall set the TM message (TABLE B- XXII) in accordance with paragraph B.4.2.3.2.2 with the MODE STATUS field of the transfer mode status word (TABLE B- XXIII) set to bit combination 3 of TABLE B- XXV. The number of memory locations allocated to a Sr is defined as the product Nb * 29 where Nb is defined in word 06 (NUMBER A field) of the TC message that commanded the record erasure. After the store has erased the Sr, it shall set the TM message in accordance with paragraph B.4.2.3.2.2 with the MODE STATUS field of the transfer mode status word (TABLE B- XXIII) set to bit combination 4 of TABLE B- XXV.

B.4.2.3.4.1.5 File transfer initiation.
To initiate the transfer of a file:

a. Aircraft Requirements: The aircraft shall send a TC message (TABLE B- XVII) to the store set in accordance with paragraph B.4.2.3.2.1 with the INSTRUCTION TYPE field of the instruction word set to bit combination 3 of TABLE B- XIX. The aircraft shall not proceed with the MDT process until the store response indicates “Transfer Enabled” (TM status TABLE B- XXIII). If non-consecutive records/blocks are to be transmitted for a file, the aircraft shall send a TC message to the store set in accordance with paragraph B.4.2.3.2.1, with the INSTRUCTION TYPE field of the instruction word set to bit combination 3 of TABLE B- XIX, designating correct values in the file number, record number, and block number data words at the start of each non-consecutive record/block transfer.

b. Store requirements: The store shall prepare to receive MDT data in the subaddress specified in the subaddress select word of the TC message as specified in paragraph B.4.2.3.2.1. When the store is prepared to receive data, it shall set the TM message (TABLE B- XXII) in accordance with paragraph B.4.2.3.2.2 with the MODE STATUS field of the transfer mode status word (TABLE B- XXIII) set to bit combination 2 of TABLE B- XXV.

B.4.2.3.4.1.6 File transfer.
To transfer a file:

a. Aircraft Requirements: The aircraft shall transfer the file data, using the TD message (TABLE B- XXIV) sent to the subaddress specified in the preceding TC message (TABLE B- XVIII), or as specified in the system specification, or interface control document. The aircraft shall send to the store, consecutive blocks (Nb) of each record and consecutive records (Nr) until all consecutive records for the Sf have been transmitted. The aircraft is not required to send a “Start new file/record” command between consecutive records of the same file. If the aircraft requires the store to echo the TD message to the aircraft, the aircraft shall request the echo of the TD message by requesting a TD message from the store with the same subaddress as the TD message was sent to the store. If the store response time from receipt of a TD message until the received TD message is available to be echoed back to the aircraft is required by the aircraft, it shall be documented in the system specification or Interface Control Document.

b. Store requirements: The store shall accept valid TD messages (TABLE B- XXIV) and store the TD messages in memory. The store shall update the TM message (TABLE B- XXII) in accordance with paragraph B.4.2.3.2.2 to reflect the receipt of the TD message. If the Select Echo mode is enabled by the aircraft, the store shall make the received TD message available for request by the aircraft in the same subaddress as the TD message was received.

B.4.2.3.4.1.7 File checksum test.
If the aircraft requires a file checksum test, the aircraft and store shall perform the following:

a. Aircraft Requirements: The aircraft shall send a TC message (TABLE B- XVII) to the store set in accordance with paragraph B.4.2.3.2.1, with the INSTRUCTION TYPE field of the instruction word set to bit combination 7 of TABLE B- XIX. The aircraft shall not proceed with the MDT process until the store response indicates “Checksum calculation completed” (TM status TABLE B- XXIII).

b. Store requirements: The store shall execute a checksum test of the Sf specified in the NUMBER B field of word 04 of the TC message as specified in paragraph B.4.2.3.2.1. While the checksum calculation is in progress, the store shall set the TM message in accordance with paragraph B.4.2.3.2.2 the MODE STATUS field of the transfer mode status word (TABLE B- XXIII) to bit combination 5 of TABLE B- XXV. The store shall execute the checksum algorithm specified in B.4.2.3.3 unless the checksum is embedded. If the checksum is embedded, the checksum algorithm shall be as specified in the system specification or interface control document. To validate the file checksum, the store shall compare the results of the checksum algorithm either against the file/record checksum word of the TC message commanding the file checksum test or, if the checksum is embedded in the file/record data, the store shall compare the result against the embedded checksum. If the file passes the checksum test, the store shall set the TM message in accordance with paragraph B.4.2.3.2.2 the MODE STATUS field of the transfer mode status word (TABLE B- XXIII) set to bit combination 6 of TABLE B- XXV. If the file fails the checksum test, the store shall set the TM message in accordance with paragraph B.4.2.3.2.2 with the MODE STATUS field of the transfer mode status word (TABLE B- XXIII) set to bit combination 7 of TABLE B- XXV.

B.4.2.3.4.1.8 Record checksum test.
If the aircraft requires a record checksum test, the aircraft and store shall perform the following:

a. Aircraft Requirements: The aircraft shall send a TC message (TABLE B- XVII) to the store set in accordance with paragraph B.4.2.3.2.1 with the INSTRUCTION TYPE field of the instruction word set to bit combination 8 of TABLE B- XIX. The aircraft shall not proceed with the MDT process until the store response indicates “Checksum calculation completed” (TM status TABLE B- XXIII).

b. Store requirements: The store shall execute a checksum test of the Sr of the Sf specified in the NUMBER B field of word 04 and 05 of the TC message as specified in paragraph B.4.2.3.2.1. While the

checksum calculation is in progress, the store shall set the TM message in accordance with paragraph B.4.2.3.2.2 with the MODE STATUS field of the transfer mode status word (TABLE B- XXIII) set to bit combination 5 of TABLE B- XXV. The store shall execute the checksum algorithm specified in B.4.2.3.3 unless the checksum is embedded. If the checksum is embedded, the checksum algorithm shall be as specified in the system specification or interface control document. To validate the record checksum the store shall compare the results of the checksum algorithm against the file/record checksum word of the TC message commanding the record checksum test, or if the checksum is embedded in the file/record data the store shall compare the result against the embedded checksum. If the file passes the checksum test, the store shall set the TM message in accordance with paragraph B.4.2.3.2.2 with the MODE STATUS field of the transfer mode status word (TABLE B- XXIII) set to bit combination 6 of TABLE B- XXV. If the file fails the checksum test, the store shall set the TM message in accordance with paragraph B.4.2.3.2.2 with the MODE STATUS field of the transfer mode status word (TABLE B- XXIII) set to bit combination 7 of TABLE B- XXV.

B.4.2.3.4.1.9 Transmission/checksum error recovery - aircraft.
If the aircraft detects a transmission/checksum error, the aircraft may repeat transmission of the entire file, a partial file, an entire record, a partial record, or individual block(s), but only after completing transmission of the remaining records of the Sf and the remaining blocks of the Sr. The repeat transmission shall be made by repeating B.4.2.3.4.1.1 through B.4.2.3.4.1.6 with the file number, record number, and block number words set in accordance with paragraph B.4.2.3.2.1.

B.4.2.3.4.1.10 Transmission error recovery - store request.
If the store detects a transmission error, the store may request repeat transmission of the entire file, a partial file, an entire record, a partial record, or individual block(s), but only after the aircraft completes transmission of the remaining records of the Sf and the remaining blocks of the Sr.

a. Store Requirements: When the store has received the last block of Sf and determines that retransmission of some of the Sf data is necessary, it shall set the TM message (TABLE B- XXII) in accordance with paragraph B.4.2.3.2.2 with the MODE STATUS field of the transfer mode status word (TABLE B- XXIII) set to bit combination 16 of TABLE B- XXV.

b. Aircraft requirements: The aircraft shall monitor the TM message after transmission of the last TD message of each Sf to determine if the store requires retransmission of TD data. If the store MODE STATUS field of the transfer mode status word (TABLE B- XXIII) is set to bit combination 16 of the aircraft shall transmit the requested record or block defined in the NUMBER B field of the current file number, current record number, and current block number words of the TM message. The aircraft shall transmit the TD message to the subaddress requested by the store in the TM message, unless the subaddress is defined in the system specification or ICD. The aircraft shall monitor the TM message, complying with each successive data request until the store MODE STATUS field of the transfer mode status word (TABLE B- XXIII) is set to bit combination 2 of TABLE B- XXV.

B.4.2.3.4.1.11 Download transmission completion.
Download transmission shall be completed by repeating B.4.2.3.4.1.1 through B.4.2.3.4.1.9 until all files defined by the specific store or aircraft system specification or ICD are transferred.

B.4.2.3.4.1.12 Exit from download mode.
To exit the MDT download mode:

a. Aircraft Requirements: The aircraft shall send a TC message (TABLE B- XVII) to the store set in accordance with paragraph B.4.2.3.2.1, with the INSTRUCTION TYPE field of the instruction word set to bit combination 14 of TABLE B- XIX. The aircraft may verify the mission stores exit from download mode by monitoring the TM message for the mission store setting the TM status word (TM status TABLE B- XXIII) to 0000 Hex.

b. Store requirements: The store shall initiate exit of the download mode and set the TM message (TABLE B- XXII) in accordance with paragraph B.4.2.3.2.2 with the MODE STATUS field of the transfer mode status word (TABLE B- XXIII) set to bit combination 15 of TABLE B- XXV. On final exit from the download mode, the store shall set the transfer mode status word (TABLE B- XXIII) to 0000 Hex. Re-

entry into the mass data transfer mode shall only occur through receipt of further download or upload mode select commands.

B.4.2.3.4.1.13 Downloading with back-to-back transfer.
The sequence of steps in B.4.2.3.4.1.1 through B.4.2.3.4.1.12 above is modified by B.4.2.3.4.4 if uploading of multiple files, records, or blocks is implemented with back-to-back transfer (B.3.1.4.1).

B.4.2.3.4.2 Upload mode.
The operating procedure for uploading data files from the mission store to the aircraft shall consist of the following steps. If the store response time to the MDT commands (TC instruction word TABLE B- XVIII) is required by the aircraft, it shall be documented in the system specification or interface control document.

B.4.2.3.4.2.1 Initiation of upload mode.
To initiate the MDT protocol upload mode:

a. Aircraft Requirements: The aircraft shall send a TC message (TABLE B- XVII) to the store set in accordance with paragraph B.4.2.3.2.1 with the INSTRUCTION TYPE field of the instruction word set to bit combination 9 of TABLE B- XIX. The aircraft shall not proceed with the MDT process until the store response indicates it is “in upload mode” (TM message (TABLE B- XXIII).

b. Store requirements: The store shall enter the upload mode and then shall set the TM message (TABLE B- XXII) in accordance with paragraph B.4.2.3.2.2 with the MODE STATUS field of the transfer mode status word (TABLE B- XXIII) set to bit combination 9 of TABLE B- XXV.

B.4.2.3.4.2.2 File transfer initiation.
To initiate the transfer of a file:

a. Aircraft Requirements: The aircraft shall send a TC message (TABLE B- XVII) to the store set in accordance with paragraph B.4.2.3.2.1 with the INSTRUCTION TYPE field of the instruction word set to bit combination 10 of TABLE B- XIX. The aircraft shall not proceed with the MDT process until the store response indicates “Transfer Enabled” (TM message TABLE B- XXIII). If non-consecutive records/blocks are to be requested for a file, the aircraft shall send a TC message to the store set in accordance with paragraph B.4.2.3.2.1, with the INSTRUCTION TYPE field of the instruction word set to bit combination 10 of TABLE B- XIX, designating correct values in the file number, record number, and block number data words at the start of each non-consecutive record/block transfer.

b. Store requirements: The store shall prepare to transmit MDT data to the subaddress specified in word 3 of the TC message as specified in paragraph B.4.2.3.2.1. When the store is prepared to transmit the designated data, it shall set the TM message (TABLE B- XXII) in accordance with paragraph B.4.2.3.2.2 with the MODE STATUS field of the transfer mode status word (TABLE B- XXIII) set to bit combination 10 of TABLE B- XXV.

B.4.2.3.4.2.3 File transfer.
To transfer a file:

a. Aircraft Requirements: The aircraft shall request the file data in the subaddress specified in the preceding TC message (TABLE B- XVIII), or as specified in the system specification or interface control document. The aircraft shall request TD messages from the store until all consecutive records for the specified file have been uploaded. The aircraft is not required to send a “start new file/record” command between consecutive records of the same file.

b. Store requirements: The store shall transmit valid TD messages (TABLE B- XXIV) to the aircraft for consecutive blocks of each record and for consecutive records until all consecutive records (Nr) for the Sf, have been transmitted or until a new TC message is received.

B.4.2.3.4.2.4 Transmission error recovery.
If the aircraft detects a transmission error, the aircraft may request repeat transmission of an entire file, a partial file, an entire record, a partial record, or individual block(s) after completion of remaining records of the Sf and remaining blocks of the Sr by repeating steps B.4.2.3.4.2.2 through B.4.2.3.4.2.3. The aircraft

shall set the file number, record number, and block number words in accordance with paragraph B.4.2.3.2.1 to recover the missing data.

B.4.2.3.4.2.5 File checksum test.
If the aircraft requires a file checksum test, the aircraft and store shall perform the following:

a. Aircraft Requirements: To execute a checksum test of the Sf, the aircraft shall execute the checksum algorithm specified in B.4.2.3.3 unless the checksum is embedded. If the checksum is embedded, the checksum algorithm shall be as specified in the system specification or interface control document. The aircraft shall then send a TC message (TABLE B- XVII) to the store set in accordance with paragraph B.4.2.3.2.1 with the INSTRUCTION TYPE field of the instruction word set to bit combination 11 of TABLE B- XIX and the file/record checksum word loaded with the aircraft computed checksum. The aircraft shall not proceed with the MDT process until the store response indicates "checksum calculation completed" (TM message TABLE B- XXIII). The aircraft shall not command a checksum for a partial file.

b. Store requirements: The store shall compare the checksum in the TC message file/record checksum word position with the expected checksum for the Sf. While the checksum comparison is in progress, the store shall set the TM message in accordance with paragraph B.4.2.3.2.2, with the MODE STATUS field of the transfer mode status word (TABLE B- XXIII) set to bit combination 11 of TABLE B- XXV. If the checksum passes the checksum test, the store shall set the TM message in accordance with paragraph B.4.2.3.2.2, with the MODE STATUS field of the transfer mode status word (TABLE B- XXIII) set to bit combination 12 of TABLE B- XXV. If the file fails the checksum test, the store shall set the TM message in accordance with paragraph B.4.2.3.2.2 with the MODE STATUS field of the transfer mode status word (TABLE B- XXIII) set to bit combination 13 of TABLE B- XXV.

B.4.2.3.4.2.6 Record checksum test.
If the aircraft requires a record checksum test, the aircraft and store shall perform the following:

a. Aircraft Requirements: To execute a checksum test of the Sr, the aircraft shall execute the checksum algorithm specified in B.4.2.3.3 unless the checksum is embedded. If the checksum is embedded, the checksum algorithm shall be as specified in the system specification or interface control document. The aircraft shall then send a TC message (TABLE B- XVII) to the store set in accordance with paragraph B.4.2.3.2.1 with the INSTRUCTION TYPE field of the instruction word set to bit combination 12 of TABLE B- XIX and the file/record checksum word loaded with the aircraft computed checksum. The aircraft shall not proceed with the MDT process until the store response indicates "checksum calculation completed" (TM message TABLE B- XXIII). The aircraft shall not command a checksum for a partial record.

b. Store requirements: The store shall compare the checksum in the TC message file/record checksum word position with the expected checksum for the Sr. While the checksum comparison is in progress, the store shall set the TM message in accordance with paragraph B.4.2.3.2.2 with the MODE STATUS field of the transfer mode status word (TABLE B- XXIII) set to bit combination 11 of TABLE B- XXV. If the checksum passes the checksum test, the store shall set the TM message in accordance with paragraph B.4.2.3.2.2 with the MODE STATUS field of the transfer mode status word (TABLE B- XXIII) set to bit combination 12 of TABLE B- XXV. If the record fails the checksum test, the store shall set the TM message in accordance with paragraph B.4.2.3.2.2 with the MODE STATUS field of the transfer mode status word (TABLE B- XXIII) set to bit combination 13 of TABLE B- XXV.

B.4.2.3.4.2.7 Checksum error recovery.
If the aircraft detects a checksum error, the aircraft may request repeat transmission of an entire file, a partial file, an entire record, a partial record, or individual block(s), but only after completing transmission of the remaining records of the Sf and the remaining blocks of the Sr by repeating B.4.2.3.4.2.1 through B.4.2.3.4.2.6 with the file number, record number, and block number words set in accordance with paragraph B.4.2.3.2.1.

B.4.2.3.4.2.8 Upload transmission completion.
Upload transmission shall be completed by repeating B.4.2.3.4.2.1 through B.4.2.3.4.2.7 until all files required by the specific store or aircraft system specification or ICD are transferred.

B.4.2.3.4.2.9 Exit from upload transmission.
To exit the MDT upload mode:

a. Aircraft Requirements: The aircraft shall send a TC message (TABLE B- XVII) to the store set in accordance with paragraph B.4.2.3.2.1 with the INSTRUCTION TYPE field of the instruction word set to bit combination 14 of TABLE B- XIX. The aircraft may verify the mission stores exit from upload mode by monitoring the TM message for the mission store setting the TM status word (TM status TABLE B- XXIII) to 0000 Hex.

b. Store requirements: The store shall initiate exit of the upload mode and set the TM message (TABLE B- XXII) in accordance with paragraph B.4.2.3.2.2 with the MODE STATUS field of the transfer mode status word (TABLE B- XXIII) set to bit combination 15 of TABLE B- XXV. On final exit from the upload mode, the store shall set the transfer mode status word (TABLE B- XXIII) to 0000 Hex. Re-entry into the mass data transfer mode shall only occur through receipt of further download or upload mode select commands.

B.4.2.3.4.2.10 Uploading with back-to-back transfer.
The sequence of steps in B.4.2.3.4.2.1 through B.4.2.3.4.2.9 above is modified by B.4.2.3.4.4 if uploading of multiple files, records, or blocks is implemented with back-to-back transfer (B.3.1.4.1).

B.4.2.3.4.3 Status Update.
The aircraft has two optional operating procedures for forcing the mission store to update the TM status without changing the commanded operations. If the store response time to the MDT commands (TC instruction word TABLE B- XVIII) is required by the aircraft, it shall be documented in the system specification or interface control document.

B.4.2.3.4.3.1 Download mode TC message.
To force an update of the TM message for the last TD transaction utilizing the TC:

a. Aircraft requirements: The aircraft shall send a TC message (TABLE B- XVII) to the store set in accordance with paragraph B.4.2.3.2.1 with the INSTRUCTION TYPE field of the instruction word set to bit combination 01 of TABLE B- XIX.

b. Store requirements: The store shall update the TM message in accordance paragraph B.4.2.3.2.2. to reflect the current status of the mass data transfer transaction associated with the last TD transaction for the subaddress designated in the subaddress select word of TABLE B- XVII, if it is non-zero, or the file, record, block designated by the TC message that contained the “no operation” instruction.

B.4.2.3.4.3.2 Download mode TD message.
To force an update of the TM message for the last TD transaction utilizing the TD message:

a. Aircraft requirements: The aircraft shall send a TD message (TABLE B- XXIV) to the store with the record/block word set with the NUMBER A field set to the Sr (from the last TD message or from the last TC message (TABLE B- XVII), which ever is most current) and the NUMBER B field set to zero and all file data words of the TD message set to 0000 Hex.

b. Store requirements: The store shall update the TM message in accordance with paragraph B.4.2.3.2.2 to reflect the status of the last TD transaction in the subaddress that the current TD message was received.

B.4.2.3.4.3.3 Upload mode.
To force an update of the TM message for the last TD transaction utilizing the TC message:

a. Aircraft Requirements: The aircraft shall send a TC message (TABLE B- XVII) to the store set in accordance with paragraph B.4.2.3.2.1 with the INSTRUCTION TYPE field of the instruction word set to bit combination 01 of TABLE B- XIX.

b. Store requirements: The store shall update the TM message in accordance with paragraph B.4.2.3.2.2 to reflect the current status of the mass data transfer transaction associated with; the last TD

transaction for a non-zero subaddress designated in the subaddress select word of TABLE B- XVII, or the file/record/block designated in the TC message containing the “no operation” command.

B.4.2.3.4.4 Back-to-back transfer operation.
For applications which implement back-to-back transfer of files, records or blocks, the following rules apply:

a. Different subaddresses shall be used for the back-to-back TD messages.

b. The system specification or interface control document shall define those subaddresses to be used for back-to-back TD messages. It shall also define any restrictions that apply for mapping files, records or blocks to different subaddresses.

c. Back-to-back transfer shall be set-up in one of two ways:

(1) Repeat B.4.2.3.4.1.5. or B.4.2.3.4.2.2, as applicable, until the mapping of each file, record, or block to its subaddress is designated; or

(2) The system specification or interface control document shall define a fixed mapping of files, records, or blocks to specific TD message subaddresses. B.4.2.3.4.l.5 or B.4.2.3.4.2.2 would be issued once with the selected subaddress word of the TC message set to 0000 Hex to start the data transfer in accordance with the fixed mapping.

B.4.2.3.4.5 System start.

B.4.2.3.4.5.1 System start - download mode.
To initiate start of software execution in a store after downloading the executable software code to the store as described in B.4.2.3.4.1:

a. Aircraft requirements: The aircraft shall send a TC message (TABLE B- XVII) to the store set in accordance with paragraph B.4.2.3.2.1 with the INSTRUCTION TYPE field of the instruction word set to bit combination 13 of TABLE B- XIX.

b. Store requirements: Stores receiving a system start command while in the download mode shall initiate program execution at the memory location designated Sf, Sr, and Sb of the TC message. The store shall set the TM message in accordance with paragraph B.4.2.3.2.2 with the MODE STATUS field of the transfer mode status word (TABLE B- XXIII) set to bit combination 8 of TABLE B- XXV. The store shall exit the download mode as required in paragraph B.4.2.3.4.1.1.

B.4.2.3.4.5.2 System start - upload mode.
To initiate start of software execution in an aircraft after uploading executable software code from the store as described in B.4.2.3.4.2:

a. Aircraft requirements: After uploading the executable software code from the store in accordance with paragraph B.4.2.3.4.2, the aircraft shall send a TC message (TABLE B- XVII) to the store set in accordance with paragraph B.4.2.3.2.1 with the INSTRUCTION TYPE field of the instruction word set to bit combination 13 of TABLE B- XIX.

b. Store requirements: Stores receiving a system start command while in the upload mode shall designate the memory location at which the aircraft is to initiate program execution by setting the Sf, Sr, and Sb fields of the TM message to the starting point for execution, in accordance with paragraph B.4.2.3.2.2 with the MODE STATUS field of the transfer mode status word (TABLE B- XXIII) set to bit combination 14 of TABLE B- XXV. The store shall exit the upload mode as required in paragraph B.4.2.3.4.2.8.

c. Aircraft requirements: The aircraft shall initiate execution at the memory location identified by the Sf, Sr, and Sb sent in the TM message.

B.4.2.4 Protocol for time tagging.
Aircraft and stores which require that a precision time reference be established for messages, or for one or more data entities within a message, shall use the applicable options herein. A message or data entity time tagging protocol shall be implemented using a reference time established by a synchronize with data

word mode code as described in B.4.1.1.3.1.6, the aircraft system time at reset (TABLE B- XXVI line 76), and time tag (TABLE B- XXVI Line 85). The system specification or ICD shall define the applicable operations, accuracy, and allowed data latency of time tagged data messages and entities. The linear data entities (TABLE B- XXVII) may be used collectively or individually, as required for the system application.

B.4.2.4.1 Time tag reference time. [Note 29.]
To establish a reference time event which will allow the store to define a transmit time tag and/or convert a receive time tag for a message, for one or more data entities, into its own time keeping reference frame:

a. Aircraft Requirements: For receive time tags, the aircraft shall send its system time in a synchronize with data word mode code to assure that no more than one aircraft clock rollover or reset can exist between the synchronize time event and the receive time tag values provided to the store. For transmit time tags, the aircraft shall send its system time in a synchronize with data word mode code at least once prior to requesting transmit messages which contain time tags. In order that the aircraft can convert the transmit time tags to its own system time, the time difference between the aircraft clock resets, or rollovers shall be greater than the maximum allowed latency of the time tag data. That latency shall be defined in the system specification or ICD. The accuracy of the “synchronize with data word” mode code with respect to the aircraft system clock shall be defined in the system specification or ICD.

b. Store Requirements: The store shall establish the reference time between its system clock and the receipt of the synchronize with data word mode code, including the value of the mode code data word, which will be used for transmit time tag definition or receive time tag conversion. The accuracy of the mission store system clock with respect to the “synchronize with data word” mode code shall be defined in the system specification or ICD.

B.4.2.4.2 Aircraft system time at reset.
To report the maximum value that the aircraft system time clock attains prior to rollover or reset for receive data messages that contain time tags:

a. Aircraft Requirements: The aircraft shall either, state its system time at reset in all receive data messages which contain time tags or all the data messages which contain time tags shall be members of the same aircraft clock cycle. That time shall be the highest value that its system time clock attained at the most recent rollover or reset event. The latency between the system time at reset event and the recording of that event in data messages shall be defined in the system specification or ICD. To allow the store to convert time tags to its own system time, the aircraft system time shall be reset to zero after attaining the stated aircraft system time at reset value which has exceeded the allowed value stated in the system specification or ICD.

b. Store Requirements: The store shall use the aircraft system time at reset to convert receive time tags to its system time if the aircraft system time at reset occurs between the time tag reference time and time tag.

B.4.2.4.3 Receive time tag.
To establish the receive time tag value in conjunction with a message or data entity:

a. Aircraft Requirements: The aircraft shall set the receive time tag. The time tag is the value of the aircraft system clock when the data is valid. The maximum latency between the receive time tag and data validity shall be defined in the system specification or ICD.

b. Store Requirements: The store shall use the receive time tag to determine the validity time of the sensitive data. The store shall consider time tagged data as invalid if the data latency exceeds the maximum data latency defined by the system specification or ICD.

B.4.2.4.4. Transmit time tag. [Note 29.]
To establish the transmit time tag value in conjunction with a message or data entity:

a. Aircraft Requirements: The aircraft shall use the transmit time tag to determine the validity time of the sensitive data. The aircraft shall consider time tagged data as invalid if the data latency exceeds the limits defined by the system specification or ICD.

Jan 99

b. Store Requirements: The store shall set the transmit time tag. The time tag is the value of the time which elapsed between the reference time which shall be the last “synchronize with data word” mode code time (see B.4.2.4.1) and the validity time of the sensitive data. The maximum latency between the transmit time tag and the data validity shall be defined in the system specification or ICD.

B.4.3 Standard data entities.
All AEIS messages shall be composed from the data entities (see B.3.1.1) listed in TABLE B- XXVI. If a store or aircraft requires a specific data entity not covered by this table, then use of a non-standard data entity is permitted if authorized by the contracting authority or specified in the approved ICD. The data word format of a non-standard data entity shall, in order of preference: (1) comply with the data word format requirements of TABLE B- XXVII, (2) comply with the data word format requirements of MIL-HDBK-1553, or (3) use a unique user-defined data word format.

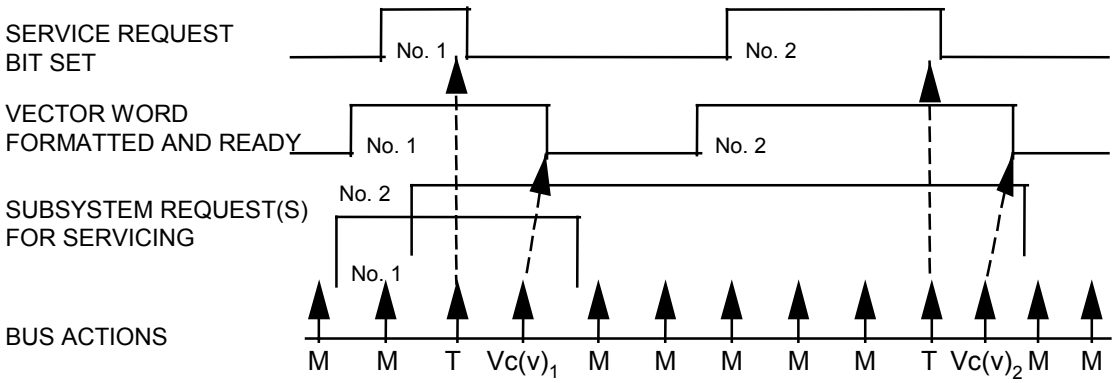

a) ASYNCHRONOUS REQUEST REPORTING

M = NORMAL MESSAGE
T = TRANSMIT VECTOR WORD
$Vc(v)_n$ = NEXT DIFFERENT VALID COMMAND
$Vc(SA)_n$ = REQUESTED DATA TRANSACTION

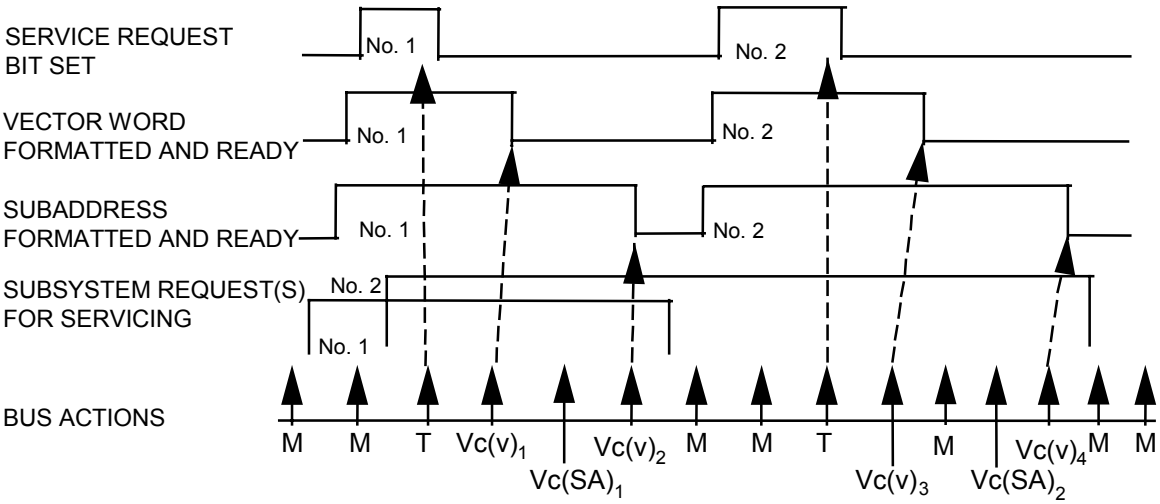

b) ASYNCHRONOUS MESSAGE (SUBADDRESS) REQUEST
NOTE: The requirement for subaddress retention, if required by the system specification or ICD, shall be satisified by this routine.

FIGURE B- 1. Examples of general form of service request protocol.

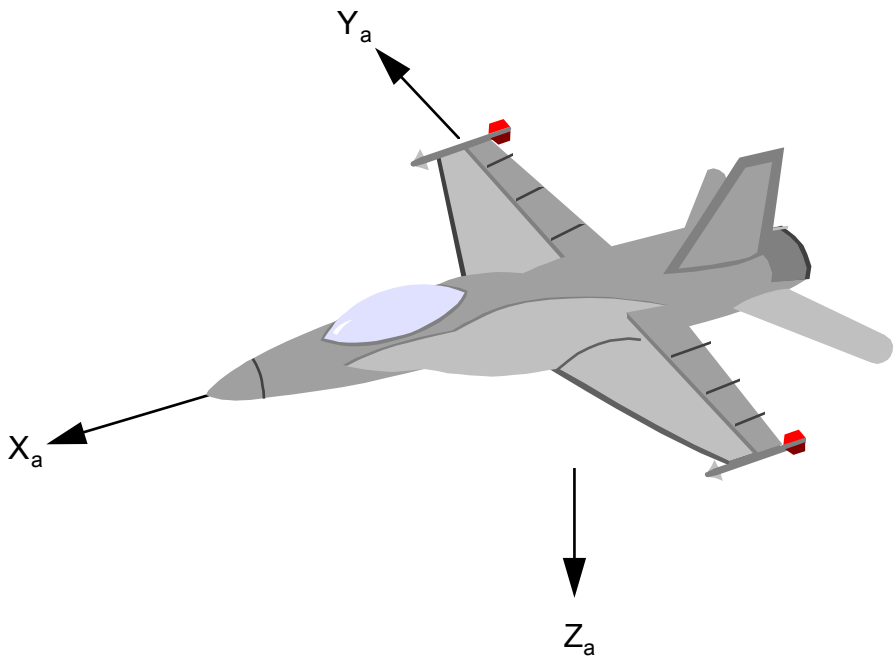

NOTES:
1. The aircraft body axis system shall be an orthogonal triad of axis X_a, Y_a, Z_a with origin 0a at the fixed location determined to be optimum for that aircraft.
2. The X_a axis is positive in the forward direction of the aircraft.
3. The Y_a axis is positive to the right of the forward direction of the aircraft.
4. The Z_a axis is positive sense down through the belly of the aircraft.

FIGURE B- 2. Aircraft body axis system.

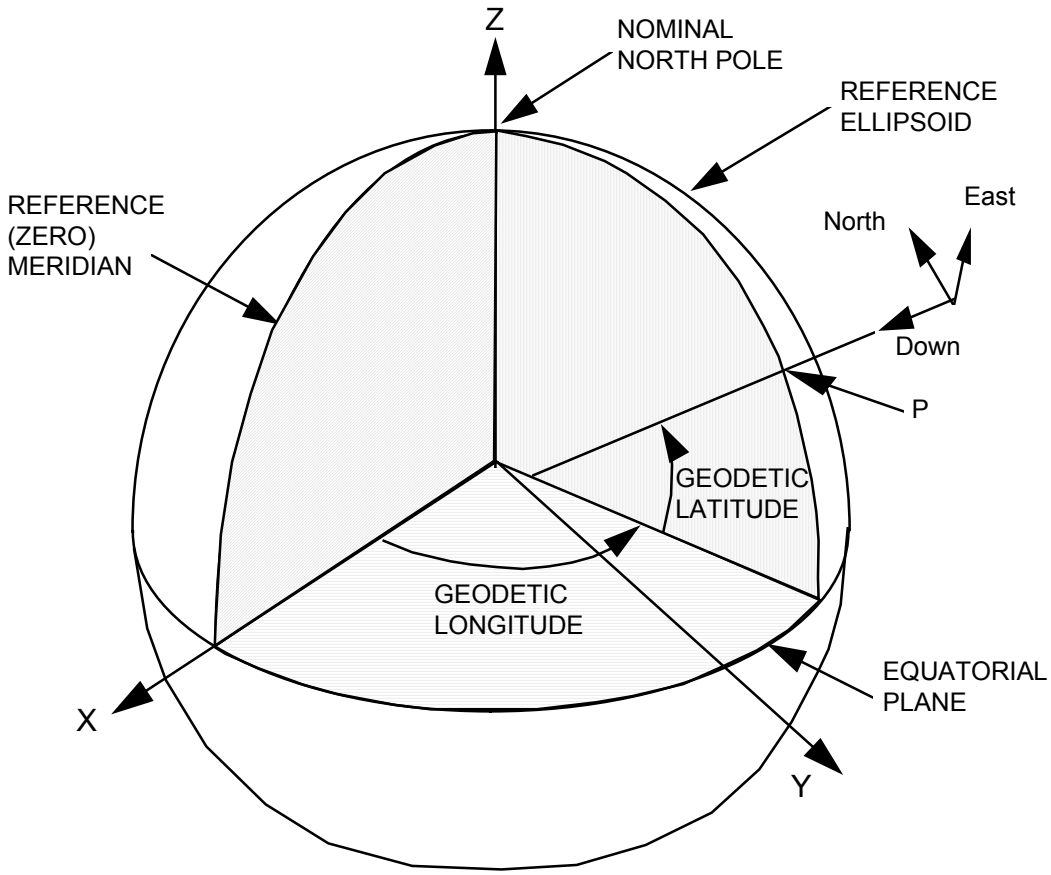

NOTES:

1. The coordinate system is the World Geodetic System of 1984 (WGS84). The origin of WGS84 is the center of mass of the earth (also the geometric center of the WGS84 ellipsoid). The Z-axis is the rotational axis of the WGS84 ellipsoid; the X-axis is the intersection of the WGS84 reference meridian plane and the plane of the mean astronomic equator; and the Y-axis completes a right-hand, earth-centered earth-fixed (ECEF) set.

2. The local level geographic north, east, down (NED) coordinate system shall have an origin coincident with the origin of the aircraft axis system specified in FIGURE B- 2, where the D-axis is collinear with the normal to the WGS84 reference ellipsoid at the point of penetration (P), but pointing in the opposite sense; the N-axis is normal to the D-axis, lies in the plane of the meridian and points north; and the E-axis completes a right-hand set. Altitude is the distance (height) above the WGS84 reference ellipsoid along the D-axis to the NED origin.

3. Any local vertical earth axis system shall have the origin coincident with a fixed point suitable for the operations required.

4. The local level wander azimuth coordinate system is a navigation frame with the Xw and Yw axis in the horizontal plane and Zw positive-up. Wander angle is defined as the angle between north and local level wander azimuth Yw axis resulting from a positive rotation about the local level wander azimuth Zw axis through the wander angle (right handed, z-up Cartesian coordinate frame).

FIGURE B- 3. Earth axis systems.

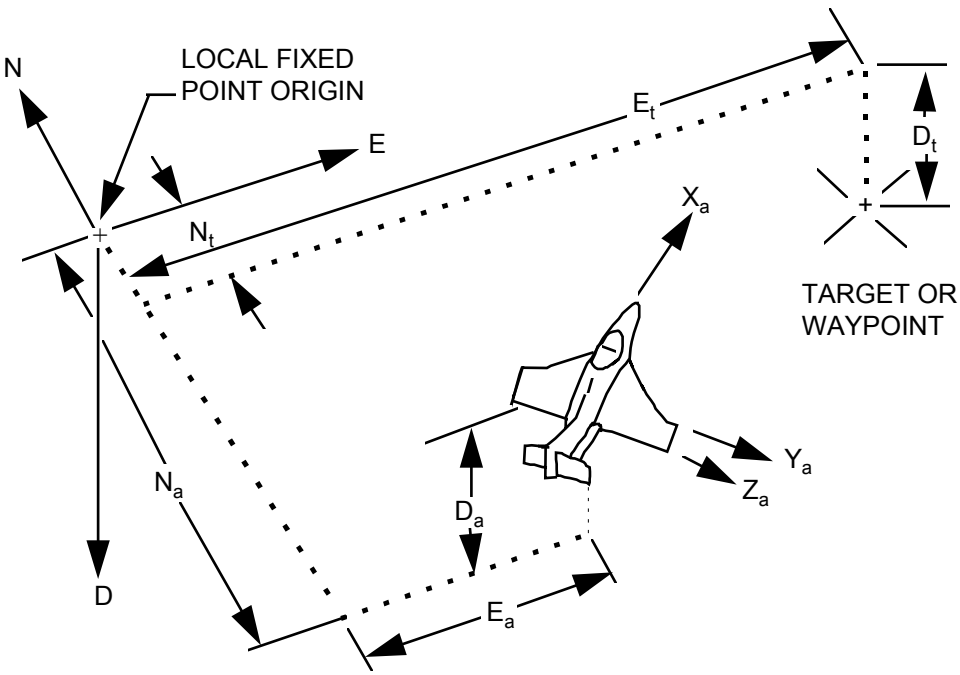

NOTE: 1. The local fixed point earth axis system defined in FIGURE B- 3 shall be used as the coordinate system.

FIGURE B- 4. Aircraft, target and waypoint position XYZ to fixed point.

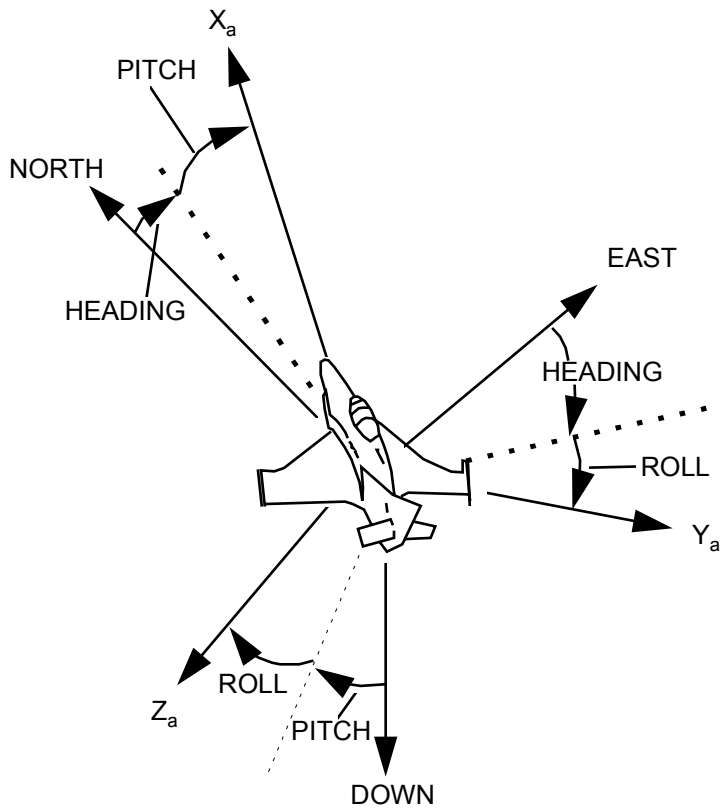

NOTES:

1. Aircraft true heading, pitch and roll are defined as the angles through which the earth axis system N, E, and D as defined by FIGURE B- 3 has to be rotated to align with the aircraft axis system defined in FIGURE B- 2. Euler angle rotation is taken in the order yaw (heading) then pitch and finally roll.
2. When there is no aircraft pitch or roll, the true heading angle is the angle formed between the aircraft X_a direction and true north. Positive angles reflect that the aircraft is heading east if in forward flight.
3. When there is no aircraft heading or roll, the pitch angle is the angle formed between the aircraft Z_a direction and local vertical. Positive angles reflect that the aircraft is nose-up.
4. When there is no aircraft heading or pitch, the roll angle is the angle formed between the aircraft Y_a direction and the east direction. Positive angles reflect that the aircraft is banked right.
5. Aircraft ground track is the rotation (positive clockwise) about the local vertical axis which brings north into coincidence with the projection of the aircraft total (north, east and down) velocity vector in the local horizontal plane through the origin 0_a.
6. Aircraft magnetic heading is defined identically to true heading except that magnetic north and east are substituted for true north and east.

FIGURE B- 5. Earth aircraft alignment.

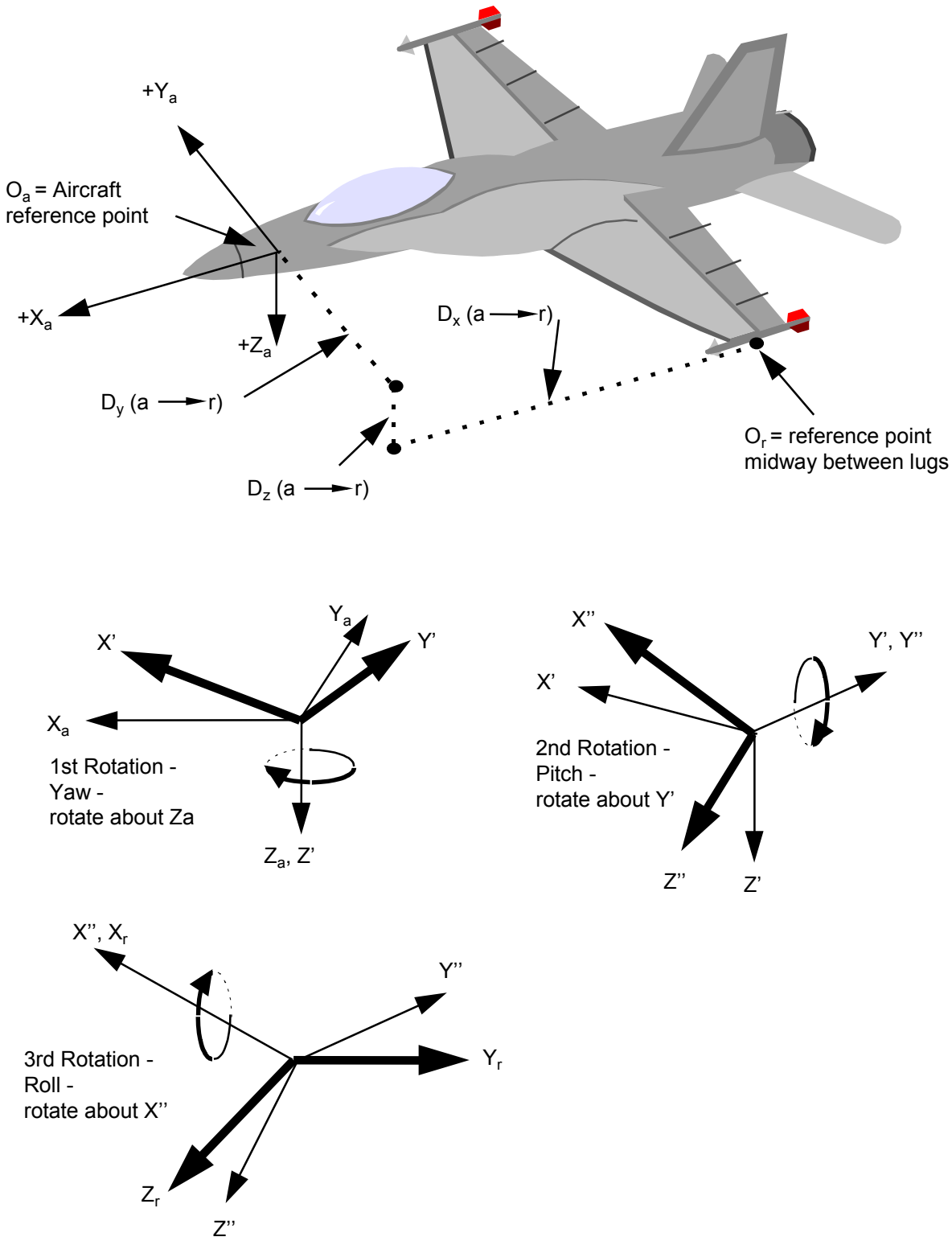

FIGURE B- 6. Aircraft-store alignment.

NOTES:

1. The coordinate system O_r, X_{ap}, Y_{ap}, Z_{ap} is a coordinate system parallel to the aircraft coordinate system but with an origin coincident with the reference axis origin.
2. The coordinate system O_a, X_a, Y_a, Z_a describes the axis system of the aircraft or an aircraft sensor.
3. The coordinate system O_s, X_s, Y_s, Z_s describes the axis system of the store or store sensor.
4. The coordinate system O_r, X_r, Y_r, Z_r describes the reference axis. The origin Or is defined as the reference point and is midway between the attachment points (such as lugs) of the store to the aircraft.
5. The reference axis yaw, pitch and roll alignment angles are defined by rotating the aircraft coordinate system O_a, X_a, Y_a, Z_a through first yaw then pitch and finally roll angles to align parallel to the reference axis O_r, X_r, Y_r, Z_r.
6. The angle defined as pitch is the angular displacement of the X_r axis from the plane defined by the axis X_a, Y_a.
7. The angle defined as roll is the angular displacement of the Y_r axis from the plane defined by the axis X_a, Y_a.
8. The angle defined as yaw is the angular displacement of the X_r axis from the plane defined by the axis X_a, Z_a.
9. The distances $D_x(a \rightarrow r)$, $D_y(a \rightarrow r)$, $D_z(a \rightarrow r)$ are defined as the offset distances from the aircraft axis origin O_a to the reference axis origin O_r.
10. If a store uses an axis system different than the reference axis defined in note 5 above, it shall be related as follows: The distances $D_x(r \rightarrow s)$, $D_y(r \rightarrow s)$, $D_z(r \rightarrow s)$ are defined as the offset distances from the reference axis origin Or to the store axis origin O_s. The store axis yaw, pitch and roll alignment angles are defined by rotating the reference coordinate system O_r, X_r, Y_r, Z_r through first yaw then pitch and finally roll angles to align parallel to the store axis O_s, X_s, Y_s, Z_s.

FIGURE B- 6. Aircraft-store alignment. Continued.

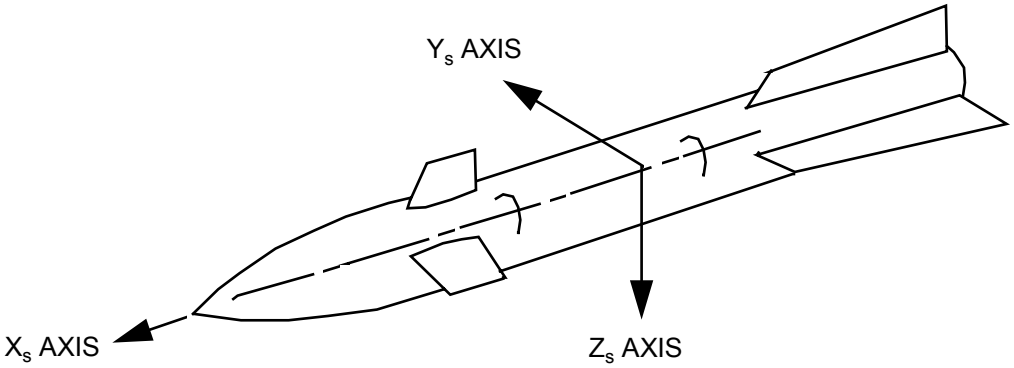

NOTES: 1. The store body axis system shall be an orthogonal triad of axis X_s, Y_s, and Z_s with origin 0s at the fixed location determined to be optimum for that store.

2. The X_s axis is positive in the forward direction of the store.

3. The Y_s axis is positive to the right of the forward direction of the store.

4. The Z_s axis is positive down through the belly of the store.

FIGURE B- 7. Store body axis system.

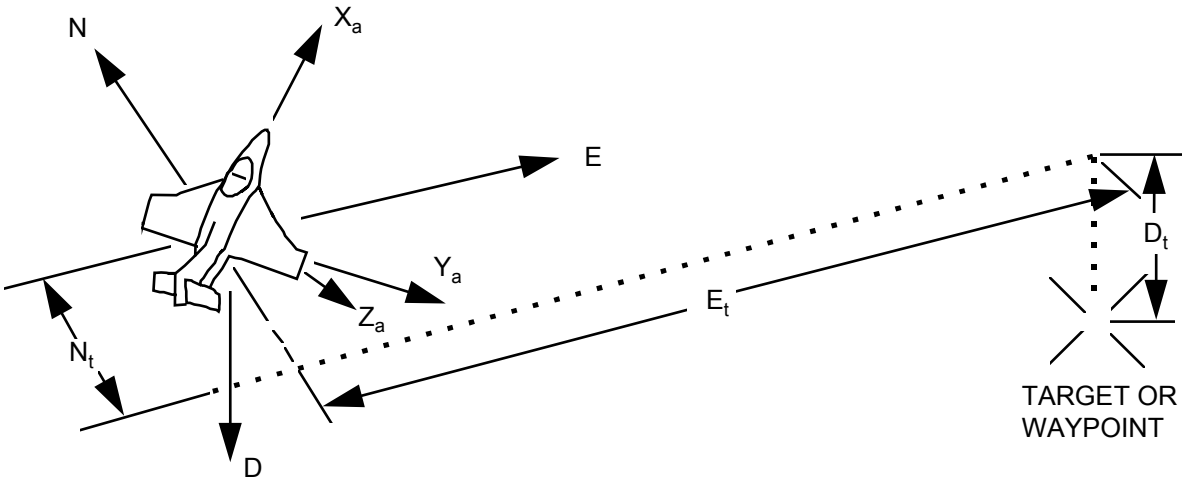

NOTE: 1. The local vertical earth axis system defined in FIGURE B- 3 shall be used as the coordinate system.

FIGURE B- 8. Target and waypoint position XYZ from current position.

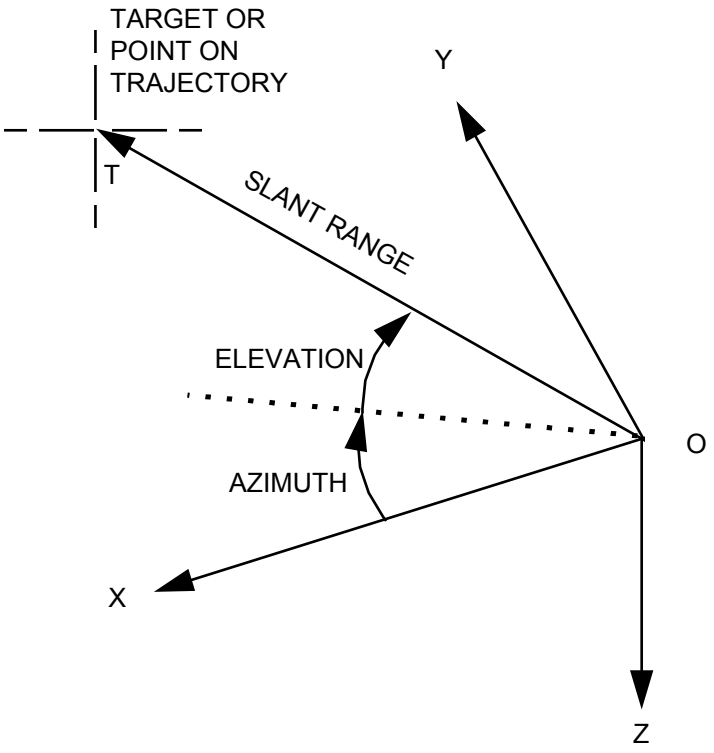

NOTES: 1. The reference coordinate system OXYZ is either the aircraft or store reference system defined in FIGURE B- 2 and FIGURE B- 7 as defined for the relevant use.

2. The azimuth and elevation angles are defined by first rotating the reference system 0XYZ through an azimuth angle and then through an elevation angle to align the OX coordinate vector with the vector OT.

3. Positive azimuth and elevation equate to the upper right as viewed from the origin.

FIGURE B- 9. Target position/store trajectory (polar).

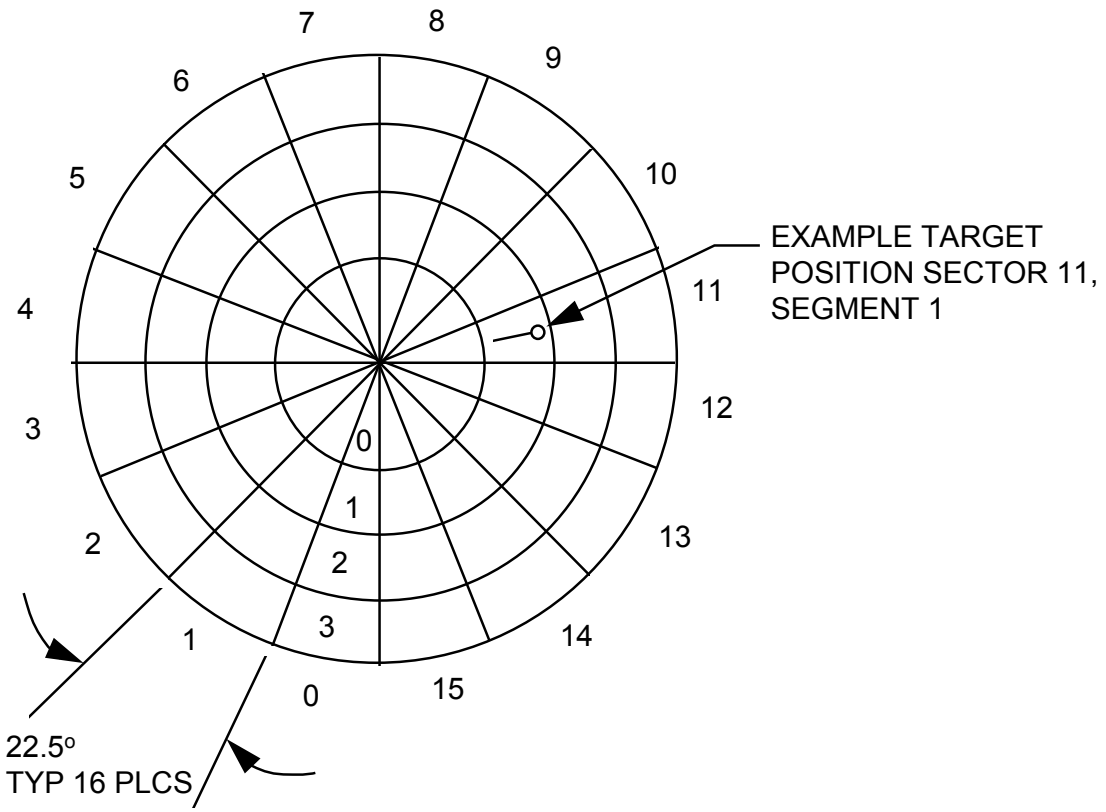

NOTES: 1. This target sector and segment position pattern shall be used in conjunction with the DISCRIMINATOR DESCRIPTION data entity of TABLE B- XLI.

2. Example of application: A bit pattern of 101101 in bit numbers 03 through 08 of the DISCRIMINATOR DESCRIPTION data entity indicates that the target is positioned in sector 11, segment 1.

3. The pattern should be positioned over the target group so as to encompass all targets under consideration. The pattern position, orientation, and scaling shall be specified in the system specification of ICD.

FIGURE B- 10. Target sector and segment position.

TABLE B- I. Subaddress/mode field application.

SUBADDRESS FIELD	MESSAGE FORMATS 1/ and 2/		DESCRIPTION
	RECEIVE	TRANSMIT	
00000 (00)	B.4.1.1.3	B.4.1.1.3	MODE CODE INDICATOR
00001 (01)	B.4.2.2.6	B.4.2.2.3	STORE DESCRIPTION, AIRCRAFT DESCRIPTION
00010 (02)	USER DEFINED	USER DEFINED	
00011 (03)	USER DEFINED	USER DEFINED	
00100 (04)	USER DEFINED	USER DEFINED	
00101 (05)	USER DEFINED	USER DEFINED	
00110 (06)	USER DEFINED	USER DEFINED	
00111 (07)	B.4.1.5.9	B.4.1.5.9	DATA PEELING
01000 (08)	RESERVED	RESERVED	TEST ONLY 3/
01001 (09)	USER DEFINED	USER DEFINED	
01010 (10)	USER DEFINED	USER DEFINED	
01011 (11)	B.4.2.2.1	B.4.2.2.2	STORE CONTROL/MONITOR
01100 (12)	USER DEFINED	USER DEFINED	
01101 (13)	USER DEFINED	USER DEFINED	
01110 (14)	B.4.1.5.8	B.4.1.5.8	MASS DATA TRANSFER
01111 (15)	USER DEFINED	USER DEFINED	
10000 (16)	USER DEFINED	USER DEFINED	
10001 (17)	USER DEFINED	USER DEFINED	
10010 (18)	USER DEFINED	USER DEFINED	
10011 (19)	B.4.2.2.4	B.4.2.2.5	NUCLEAR WEAPON
10100 (20)	USER DEFINED	USER DEFINED	
10101 (21)	USER DEFINED	USER DEFINED	
10110 (22)	USER DEFINED	USER DEFINED	
10111 (23)	USER DEFINED	USER DEFINED	
11000 (24)	USER DEFINED	USER DEFINED	
11001 (25)	USER DEFINED	USER DEFINED	
11010 (26)	USER DEFINED	USER DEFINED	
11011 (27)	B.4.2.2.4	B.4.2.2.5	NUCLEAR WEAPON
11100 (28)	USER DEFINED	USER DEFINED	
11101 (29)	USER DEFINED	USER DEFINED	
11110 (30)	USER DEFINED	USER DEFINED	DATA WRAPAROUND 4/
11111 (31)	B.4.1.1.3	B.4.1.1.3	MODE CODE INDICATOR

TABLE B- I. Subaddress/mode field application. (Continued)

1/ All message formats designated by USER DEFINED subaddresses shall comply with B.4.2.1.

2/ Command words with subaddress designated as RESERVED shall not be sent to AEIS stores.

3/ Subaddress 08 (decimal) is reserved to avoid misinterpretation of a status word (with service request set) as a command word for subaddress 08. This subaddress may, however, be used for test purposes at the user's risk.

4/ Reference MIL-STD-1553, paragraph 30.7.

TABLE B- II. Vector word (asynchronous message demand) format.

FIELD NAME	BIT NO.	DESCRIPTION
FORMAT FLAG	-00-	Shall be set to logic 0.
RESERVED 1/	-01- -02- -03- -04-	RESERVED. Shall be set to logic 0. RESERVED. Shall be set to logic 0. RESERVED. Shall be set to logic 0. RESERVED. Shall be set to logic 0.
T/R 1/	-05-	Shall be set to a logic 1 to indicate that the requested message is a transmit command. (Logic 0 indicates a receive command request.)
SUBADDRESS 1/	-06- -07- -08- -09- -10-	MSB = 16 LSB = 1 Bits 6 through 10 contain the subaddress of the required message.
WORD COUNT 1/	-11- -12- -13- -14- -15-	MSB = 16 LSB = 1 Bits 11 through 15 contain the word count of the required message.

1/ The designated field definitions apply only when bit number 00 is set to logic 0. See TABLE B- III for alternate vector word format.

2/ The vector word shall be set to 0000 hexadecimal, unless the service request notification protocol (B.4.1.5.4) is in progress.

TABLE B- III. Vector word (asynchronous action demand) format.

FIELD NAME	BIT NO.	DESCRIPTION
FORMAT FLAG	-00-	Shall be set to logic 1.
NOTIFICATION FLAG 1/	-01-	User defined.
	-02-	User defined.
	-03-	User defined.
	-04-	User defined.
	-05-	User defined.
	-06-	User defined.
	-07-	User defined.
	-08-	User defined.
	-09-	User defined.
	-10-	User defined.
	-11-	User defined.
	-12-	User defined.
	-13-	User defined.
	-14-	User defined.
	-15-	User defined.

1/ The user defined field definitions apply only when bit number 00 is set to logic 1. See TABLE B- II for alternate vector word format.

2/ The vector word shall be set to 0000 hexadecimal, unless the service request notification protocol (B.4.1.5.4) is in progress.

TABLE B- IV. DELETED

TABLE B- V. DELETED.

TABLE B- VI. DELETED.

TABLE B- VII. Base message format (BC-RT transfer).

WORD NO.	DESCRIPTION/COMMENT	PARAGRAPH
-CW-	COMMAND WORD (RECEIVE)	B.4.1.1
-01-	HEADER	B.4.2.1.1
-02-		
-03-		
-04-		
-05-		
-06-		
-07-		
-08-		
-09-		
-10-		
-11-		
-12-		
-13-		
-14-		
-15-	Word positions for user selected data	
-16-	entities and message checksum.	B.4.2.1.2
-17-		
-18-		
-19-		
-20-		
-21-		
-22-		
-23-		
-24-		
-25-		
-26-		
-27-		
-28-		
-29-		
-30-		
-SW-	STATUS WORD (RECEIVER)	B.4.1.2

1/ The format shown is for mission store messages. For carriage stores, however, words 31 and 32 may be added to the block referenced to paragraph B.4.2.1.2.

TABLE B- VIII. Base message format (RT-BC transfer).

WORD NO.	DESCRIPTION/COMMENT	PARAGRAPH
-CW-	COMMAND WORD (TRANSMIT)	B.4.1.1
-SW-	STATUS WORD (TRANSMITTER)	B.4.1.2
-01-	HEADER	B.4.2.1.1
-02-		
-03-		
-04-		
-05-		
-06-		
-07-		
-08-		
-09-		
-10-		
-11-		
-12-		
-13-		
-14-		
-15-	Word positions for user selected data .	
-16-	entities and message checksum	B.4.2.1.2
-17-		
-18-		
-19-		
-20-		
-21-		
-22-		
-23-		
-24-		
-25-		
-26-		
-27-		
-28-		
-29-		
-30-		

1/ The format shown is for mission store messages. For carriage stores, however, words 31 and 32 may be added to the block referenced to paragraph B.4.2.1.2.

TABLE B- IX. Base message format (RT-RT transfer).

WORD NO.	DESCRIPTION/COMMENT	PARAGRAPH
-CW-	COMMAND WORD (RECEIVE)	B.4.1.1
-CW-	COMMAND WORD (TRANSMIT)	B.4.1.1
-SW-	STATUS WORD (TRANSMITTER)	B.4.1.2
-01-	HEADER	B.4.2.1.1
-02-		
-03-		
-04-		
-05-		
-06-		
-07-		
-08-		
-09-		
-10-		
-11-		
-12-		
-13-		
-14-		
-15-	Word positions for user selected data	
-16-	entities and message checksum.	B.4.2.1.2
-17-		
-18-		
-19-		
-20-		
-21-		
-22-		
-23-		
-24-		
-25-		
-26-		
-27-		
-28-		
-29-		
-30-		
-SW-	STATUS WORD (RECEIVER)	B.4.1.2

1/ The format shown is for mission store messages. For carriage stores, however, words 31 and 32 may be added to the block referenced to paragraph B.4.2.1.2.

TABLE B- X. Header word.

HEADER (HEXADECIMAL)	APPLICATION
0000 THROUGH 03FF	User selected
0400	Store control message (B.4.2.2.1)
0401 THROUGH 041F	Reserved for store safety critical control and monitor
0420	Store monitor message (B.4.2.2.2)
0421	Store description message (B.4.2.2.3)
0422	Transfer control message (B.4.2.3.2.1)
0423	Transfer monitor message (B.4.2.3.2.2)
0424 THROUGH 042D	Reserved for carriage store non-safety critical control and monitor
042E THROUGH 04FF	Reserved for future non-safety critical control and monitor
0500 THROUGH FFFF	User selected

TABLE B- XI. Store control (BC-RT transfer). 1/

WORD NO.	DESCRIPTION/COMMENT	PARAGRAPH or TABLE
-CW-	COMMAND WORD (Subaddress 01011 Binary)	B.4.1.1
-01-	HEADER (0400 hexadecimal)	B.4.2.1.1
-02-	Invalidity for words 01-16	TABLE B- XXVI line 2
-03-	Invalidity for words 17-30	TABLE B- XXVI line 2
-04-	Control of critical state of store -	TABLE B- XXVI line 3
-05-	Set 1 with critical authority	TABLE B- XXVI line 5
-06-	Control of critical state of store -	TABLE B- XXVI line 4
-07-	Set 2 with critical authority	TABLE B- XXVI line 5
-08-	Fuzing mode 1	TABLE B- XXVI line 8
-09-	Arm delay from release	TABLE B- XXVI line 12
-10-	Fuze function delay from release	TABLE B- XXVI line 13
-11-	Fuze function delay from impact	TABLE B- XXVI line 14
-12-	Fuze function distance	TABLE B- XXVI line 18
-13-	Fire interval	TABLE B- XXVI line 20
-14-	Number to fire	TABLE B- XXVI line 21
-15-	High drag arm time	TABLE B- XXVI line 16
-16-	Function time from event	TABLE B- XXVI line 17
-17-	Void/layer number	TABLE B- XXVI line 23
-18-	Impact velocity	TABLE B- XXVI line 24
-19-	Fuzing mode 2	TABLE B- XXVI line 9
-20-	Dispersion data	TABLE B- XXVI line 165
-21-	Duration of dispersion	TABLE B- XXVI line 166
-22-	Carriage Store S&RE Unit(s) Select 2/	TABLE B- XXVI line 167
-23-	Separation elements	TABLE B- XXVI line 168 or 169
-24-	Surface delays	TABLE B- XXVI line 170 or 171
-25-	Reserved data words (0000 hexadecimal)	TABLE B- XXVI line 1
-26-		
-27-		
-28-		
-29-		
-30-	Checksum word	B.4.1.5.2
-SW-	STATUS WORD	B.4.1.2

TABLE B- XI. Store control (BC-RT transfer). (Continued)

1/ The message format shown is for BC-RT transfers. The data entities and entity sequence for word numbers 01 through 30 may also be applied to RT-RT transfers providing that the transmitting RT is not an AEIS store.

2/ Word 22 to be used to identify the selected carriage store S&RE unit(s) when D10 (Bit 00) of word 04 is set to logic 1 and D2 through D0 (Bits 08 through 10) are set to logic 010 respectively.

TABLE B- XII. Store monitor (RT-BC transfer). 1/

WORD NO.	DESCRIPTION/COMMENT	PARAGRAPH or TABLE
-CW-	COMMAND WORD (Subaddress 01011 Binary)	B.4.1.1
-SW-	STATUS WORD	B.4.1.2
-01-	HEADER (0420 hexadecimal)	B.4.2.1.1
-02-	Invalidity for words 01-16	TABLE B- XXVI line 2
-03-	Invalidity for words 17-30	TABLE B- XXVI line 2
-04-	Critical monitor 1	TABLE B- XXVI line 6
-05-	Critical monitor 2	TABLE B- XXVI line 7
-06-	Fuzing/arming mode status 1	TABLE B- XXVI line 10
-07-	Protocol status	TABLE B- XXVI line 25
-08-	Monitor of arm delay from release	TABLE B- XXVI line 12
-09-	Monitor of fuze function delay from release	TABLE B- XXVI line 13
-10-	Monitor of fuze function delay from impact	TABLE B- XXVI line 14
-11-	Monitor of fuze function distance	TABLE B- XXVI line 18
-12-	Monitor of fire interval	TABLE B- XXVI line 20
-13-	Monitor of number to fire	TABLE B- XXVI line 21
-14-	Monitor of high drag arm time	TABLE B- XXVI line 16
-15-	Monitor of function time from event	TABLE B- XXVI line 17
-16-	Monitor of void/layer number	TABLE B- XXVI line 23
-17-	Monitor of impact velocity	TABLE B- XXVI line 24
-18-	Fuzing/arming mode status 2	TABLE B- XXVI line 11
-19-	Monitor of dispersion data	TABLE B- XXVI line 165
-20-	Monitor of dispersion duration	TABLE B- XXVI line 166
-21-	Monitor of carriage store S&RE Unit(s) select	TABLE B- XXVI line 167
-22-	Monitor of separation elements	TABLE B- XXVI line 168 or 169
-23-	Monitor of surface delays	TABLE B- XXVI line 170 or 171
-24-		
-25-		
-26-		
-27-	Reserved words (0000 hexadecimal)	TABLE B- XXVI line 1
-28-		
-29-		
-30-	Checksum word	B.4.1.5.2

1/ The message format shown is for RT-BC transfers. The data entities and entity sequence for word numbers 01 through 30 may also be applied to RT-RT transfers provided that the receiving RT is not an AEIS store.

TABLE B- XIII. Store description message. 1/

WORD NO.	DESCRIPTION/COMMENT	PARAGRAPH or TABLE
-CW-	COMMAND WORD (Subaddress 00001 Binary)	B.4.1.1
-SW-	STATUS WORD	B.4.1.2
-01-	HEADER (0421 hexadecimal)	B.4.2.1.1
-02-	Country code	TABLE B- XXVI line 26
-03-	Store identity (binary)	TABLE B- XXVI line 27
-04-	Store identity (ASCII) 1	TABLE B- XXVI line 28
-05-	Store identity (ASCII) 2	TABLE B- XXVI line 28
-06-	Store identity (ASCII) 3	TABLE B- XXVI line 28
-07-	Store identity (ASCII) 4	TABLE B- XXVI line 28
-08-	Store identity (ASCII) 5	TABLE B- XXVI line 28
-09-	Store identity (ASCII) 6	TABLE B- XXVI line 28
-10-	Store identity (ASCII) 7	TABLE B- XXVI line 28
-11-	Store identity (ASCII) 8	TABLE B- XXVI line 28
-12-	Maximum interruptive BIT time	TABLE B- XXVI line 30
-13-	Store configuration identifier 1	TABLE B- XXVI line 29
-14-	Store configuration identifier 2	TABLE B- XXVI line 29
-15-	Store configuration identifier 3	TABLE B- XXVI line 29
-16-		
-17-		
-18-		
-19-		
-20-		
-21-		
-22-		
-23-		
-24-		
-25-		
-26-	Reserved words (0000 hexadecimal)	TABLE B- XXVI line 1
-27-		
-28-		
-29-		
-30-	Checksum word	B.4.1.5.2.1

1/ The message format shown is for RT-BC transfers. The data entities and entity sequence for word numbers 01 through 30 may also be applied to RT-RT transfers providing that the receiving RT is not an AEIS store.

TABLE B- XIV. Country code.

FIELD NAME	BIT NUMBER	DESCRIPTION
CHARACTER 1	-00-	(Shall be set to logic 0.)
	-01-	High Order Bit
	-02-	
	-03-	
	-04-	
	-05-	
	-06-	
	-07-	Low Order Bit
CHARACTER 2	-08-	(Shall be set to logic 0.)
	-09-	High Order Bit
	-10-	
	-11-	
	-12-	
	-13-	
	-14-	
	-15-	Low Order Bit.

1/ The country code shall be represented by the character code set defined in ANSI X3.4 American Standard for Information Interchange (ASCII) using the appropriate country code specified in ISO 3166. (Only upper case alphabetic characters shall be used.)

2/ Bit numbers 00 and 08 shall be set to logic 0.

3/ The country code shall be used as a qualifier of the store identity (binary) (TABLE B- XV) and store identity (ASCII) (TABLE B- XVI) to distinguish between store identification codes which may be duplicative between different countries.

TABLE B- XV. Store identity (binary).

FIELD NAME	BIT NUMBER	DESCRIPTION	
STORE TYPE	-00-	MSB = 1024	Shall be set to indicate the store type code value as assigned by the control point for store nomenclature.
	-01-		
	-02-		
	-03-		
	-04-		
	-05-		
	-06-		
	-07-		
	-08-		
	-09-		
	-10-	LSB = 1	
STORE VARIANT	-11-	MSB = 16	Shall be set to indicate the store variant code value as assigned by the control point for store nomenclature.
	-12-		
	-13-		
	-14-		
	-15-	LSB = 1	

TABLE B- XVI. Store or aircraft identity (ASCII).

FIELD NAME	BIT NUMBER	DESCRIPTION
CHARACTER 1	-00-	(Shall be set to logic 0.)
	-01-	High Order Bit
	-02-	
	-03-	
	-04-	
	-05-	
	-06-	
	-07-	Low Order Bit
CHARACTER 2	-08-	(Shall be set to logic 0.)
	-09-	High Order Bit
	-10-	
	-11-	
	-12-	
	-13-	
	-14-	
	-15-	Low Order Bit.

1/ The characters shall be represented by the American National Standard for Information Interchange (ASCII) character code set defined in ANSI X3.4. Alphabetical characters shall be upper case.

2/ Bit numbers 00 and 08 shall be set to logic 0.

3/ The store, or aircraft, type designator shall be a 16 character maximum code assigned by the control point for nomenclature. The type designator shall be left justified, space (20 Hexadecimal) [Note 30.] filled into the eight store identity (ASCII) data words in the store description message (TABLE B- XIII).

Example 1: For type designators AGM-65C and AN/ALQ-137A(V)10:

Store identity (ASCII) word no.	1		2		3		4		5		6		7		8	
Character no.	1	2	1	2	1	2	1	2	1	2	1	2	1	2	1	2
	A	G	M	-	6	5	C									
	A	N	/	A	L	Q	-	1	3	7	A	(	V	)	1	0

Example 2: For type designators F-16C/D and TORNADO-GR4:

Aircraft identity (ASCII) word no.	1		2		3		4		5		6		7		8	
Character no.	1	2	1	2	1	2	1	2	1	2	1	2	1	2	1	2
	F	-	1	6	C	/	D									
	T	O	R	N	A	D	O	-	G	R	4					

TABLE B- XVII. Transfer Control (TC) message format.

WORD NO.	DESCRIPTION/COMMENT	PARAGRAPH or TABLE
-CW-	COMMAND WORD (Subaddress 01110 binary)	B.4.1.1
-01-	HEADER (0422 hexadecimal)	B.4.2.1.1
-02-	Instruction	B.4.2.3.2.1.2
-03-	Subaddress select	B.4.2.3.2.1.3
-04-	File number	B.4.2.3.2.1.4
-05-	Record number	B.4.2.3.2.1.5
-06-	Block number	B.4.2.3.2.1.6
-07-	File/record checksum	B.4.2.3.2.1.7
-08-	Checksum word	B.4.2.3.2.1.8
-SW-	STATUS WORD	B.4.1.2

TABLE B- XVIII. Instruction word.

FIELD NAME	BIT NUMBER	DESCRIPTION
INSTRUCTION TYPE	-00-	No operation - commands the store to update the TM message with current status of the mass data transfer transactions
	-01-	Select download mode - commands the store to enter (or remain in) the download mass data transfer mode.
	-02-	Select upload mode - commands the store to enter (or remain in) the upload mass data transfer mode.
	-03-	Start new file/record - commands the store to prepare for receiving or transmitting, as applicable, Transfer Data (TD) messages.
	-04-	Erase all files - commands the store to erase data in all store contained memory addresses allocated to mass data transfer storage.
	-05-	Erase designated file - commands the store to erase the designated file.
	-06-	Erase designated record - commands the store to erase the designated record.
	-07-	Select echo mode - commands the store to enter (or remain in) the TD echo mode.
	-08-	Calculate file checksum - commands the store to run the file checksum test.
	-09-	Calculate record checksum - commands the store to run the record checksum test.
	-10-	System start - system start command to the store.
	-11-	Exit transfer mode - commands the store to exit the mass data transfer mode.
	-12-	Select block checksum mode - commands the store to interpret word 30 of the TD message as a message checksum (See B.4.1.5.2.1) if in download mode, or to supply word 30 of the TD message as a message checksum if in the upload mode.
RESERVED	-13-	Shall be set to a Logic 0.
	-14-	Shall be set to a Logic 0.
	-15-	Shall be set to a Logic 0.

TABLE B- XIX. Allowable instruction type field bit states. [Note 31.]

INSTRUCTION WORD BIT NUMBER	BIT NAME	ALLOWABLE BIT COMBINATIONS													
		1	2	3	4	5	6	7	8	9	10	11	12	13	14
0	No operation	1	0	0	0	0	0	0	0	0	0	0	0	0	0
1	Select download mode	X	1	1	1	1	1	1	1	0	0	0	0	0	0
2	Select upload mode	X	0	0	0	0	0	0	0	1	1	1	1	0	0
3	Start new file/record	X	0	1	0	0	0	0	0	0	1	0	0	0	0
4	Erase all files	X	0	0	1	0	0	0	0	0	0	0	0	0	0
5	Erase designated file	X	0	0	0	1	0	0	0	0	0	0	0	0	0
6	Erase designated record	X	0	0	0	0	1	0	0	0	0	0	0	0	0
7	Select echo mode	X	X	Y	X	X	X	X	X	0	0	0	0	0	0
8	Calculate file checksum	X	0	0	0	0	0	1	0	0	0	1	0	0	0
9	Calculate record checksum	X	0	0	0	0	0	0	1	0	0	0	1	0	0
10	System start	X	0	0	0	0	0	0	0	0	0	0	0	1	0
11	Exit transfer	X	0	0	0	0	0	0	0	0	0	0	0	1	1
12	Select block checksum mode	X	X	Y	X	X	X	X	X	X	Y	X	X	X	X

1/ The Table represents the 14 allowable bit combinations of the 12 bit instruction type field of TABLE B- XVIII.

2/ X = Don't care.

3/ Y = selectable option.

TABLE B- XX. Subaddress select.

FIELD NAME	BIT NUMBER	DESCRIPTION
SUBADDRESS	-00-	MSB = 16 — Subaddress of TD message for designated file, record or block.
	-01-	
	-02-	
	-03-	
	-04-	LSB = 1
RESERVED	-05-	Shall be set to Logic 0.
	-06-	
	-07-	
	-08-	
	-09-	
	-10-	
	-11-	
	-12-	
	-13-	
	-14-	
	-15-	

TABLE B- XXI. Dual binary number.

FIELD NAME	BIT NUMBER	DESCRIPTION
NUMBER A	-00-	MSB = 128
	-01-	
	-02-	
	-03-	Binary encoded number.
	-04-	
	-05-	
	-06-	
	-07-	LSB = 1
NUMBER B	-08-	MSB = 128
	-09-	Binary encoded number.
	-10-	
	-11-	
	-12-	
	-13-	
	-14-	
	-15-	LSB = 1

TABLE B- XXII. Transfer Monitor (TM) message format.

WORD NO.	DESCRIPTION/COMMENT	PARAGRAPH
-CW-	COMMAND WORD (Subaddress 01110 binary)	B.4.1.1
-SW-	STATUS WORD	B.4.1.2
-01-	HEADER (0423 hexadecimal)	B.4.2.1.1
-02-	Last received instruction	B.4.2.3.2.2.2
-03-	Transfer mode status	B.4.2.3.2.2.3
-04-	Current selected subaddress	B.4.2.3.2.2.4
-05-	Current file number	B.4.2.3.2.2.5
-06-	Current record number	B.4.2.3.2.2.6
-07-	Current block number	B.4.2.3.2.2.7
-08-	Current file/record checksum	B.4.2.3.2.2.8
-09-	Checksum word position	B.4.2.3.2.2.9

TABLE B- XXIII. Transfer mode status.

FIELD NAME	BIT NUMBER	DESCRIPTION
MODE STATUS	-00-	In download mode - indicates the store is in download mode.
	-01-	In upload mode - indicates the store is in upload mode.
	-02-	Transfer enabled - indicates the store is ready for transfer of TD messages
	-03-	Erase in progress - indicates the store is erasing the commanded MDT data
	-04-	Erase completed - indicates the store has completed the commanded erase operation.
	-05-	Echo mode selected - indicates echo mode is enabled in the store.
	-06-	Checksum calculation in progress - indicates the store is executing the commanded checksum calculation.
	-07-	Checksum calculation completed - indicates the store has completed the commanded checksum calculation.
	-08-	Checksum failed - indicates the commanded checksum calculation failed.
	-09-	Execution started - indicates the store has initiated execution at the commanded location or the mission store has loaded the location in the TM message that the aircraft is to initiate execution.
	-10-	Exit in progress - indicates the store is exiting the MDT mode.
	-11-	Retransmission request - indicates the store request for retransmission of limited TD data
RESERVED	-12-	Shall be set to a Logic 0.
	-13-	Shall be set to a Logic 0.
	-14-	Shall be set to a Logic 0.
	-15-	Shall be set to a Logic 0.

TABLE B- XXIV. Transfer Data (TD) message format. **1/**

WORD NO.	DESCRIPTION/COMMENT	PARAGRAPH
-CW-	COMMAND WORD (Subaddress A/R)	B.4.1.1
-01-	Record/block number	B.4.2.3.2.3.1
-02-	File data	
-03-		
-04-		
-05-		
-06-		
-07-		
-08-		
-09-		
-10-		
-11-		
-12-		
-13-		
-14-		
-15-		
-16-		
-17-		
-18-		
-19-		
-20-		
-21-		
-22-		
-23-		
-24-		
-25-		
-26-		
-27-		
-28-		
-29-		
-30-		
-SW-	STATUS WORD	B.4.1.2

1/ This is a 30 word fixed length message.

TABLE B- XXV. Allowable mode status field bit states.

STATUS WORD BIT NUMBER	BIT NAME	ALLOWABLE BIT COMBINATION NUMBERS															
		1	2	3	4	5	6	7	8	9	10	11	12	13	14	15	16
0	In download mode	1	1	1	1	1	1	1	1	0	0	0	0	0	0	Y	1
1	In upload mode	0	0	0	0	0	0	0	0	1	1	1	1	1	1	Y	0
2	Transfer enabled	0	1	0	0	0	0	0	0	0	1	0	0	0	0	0	0
3	Erase in progress	0	0	1	0	0	0	0	0	0	0	0	0	0	0	0	0
4	Erase completed	0	0	0	1	0	0	0	0	0	0	0	0	0	0	0	0
5	Echo mode selected	X	X	X	X	X	X	X	0	0	0	0	0	0	0	0	0
6	Checksum calculation in progress	0	0	0	0	1	0	0	0	0	0	1	0	0	0	0	0
7	Checksum calculation completed	0	0	0	0	0	1	1	0	0	0	0	1	1	0	0	0
8	Checksum failed	0	0	0	0	0	0	1	0	0	0	0	0	1	0	0	0
9	Execution started	0	0	0	0	0	0	0	1	0	0	0	0	0	1	0	0
10	Exit in progress	0	0	0	0	0	0	0	0	0	0	0	0	0	0	1	0
11	Retransmission request	0	0	0	0	0	0	0	0	0	0	0	0	0	0	0	1

1/ The Table represents the 16 allowable bit combinations of the 11 bit mode status field of TABLE B- XXIII.

2/ X = reflects the commanded state of Echo mode from the last TC message.

3/ Y= the commanded mode prior to exit.

TABLE B- XXVI. Data entity list. [Note 32.]

Line no.	Data entity name	Entity Type and Table number	Entity shall comply with the following requirements and description:
1	Reserved		Bit numbers 00-15 shall be set to logic 0. Shall be placed in transmitted or received messages to provide fixed message lengths while reserving data word positions for future AEIS applications.
2	Invalidity	INVALIDITY, TABLE B- XXXI	Shall be used to indicate invalidity of data entities.
3	Critical control 1	CRITICAL CONTROL 1, TABLE B- XXXII	Shall be used for sending safety critical control commands to a mission store.
4	Critical control 2	CRITICAL CONTROL 2, TABLE B- XXXIII	Shall be used for sending safety critical control commands to a mission store.
5	Critical authority	CRITICAL AUTHORITY, TABLE B- XXXIV	Shall be used as a coded check for CRITICAL CONTROL 1 and CRITICAL CONTROL 2. Shall not be used for error correction.
6	Critical monitor 1	CRITICAL MONITOR 1, TABLE B- XXXV	Shall be used to indicate both the demanded state (reflecting data bits D_{10} through D_3 in CRITICAL CONTROL 1) and the current store state.
7	Critical monitor 2	CRITICAL MONITOR 2, TABLE B- XXXVI	Shall be used to indicate both the demanded state (reflecting data bits D_{10} through D_3 in CRITICAL CONTROL 2) and the current store state.
8	Fuzing mode 1	FUZING MODE, TABLE B- XXXVII	Shall be used by stores with interface controllable post release operation to enable or disable fuze modes.
9	Fuzing mode 2	FUZING MODE, TABLE B- XLIII	(for stores with interface controllable post release operation) Enables or disables fuze modes as indicated in the table.
10	Fuzing/arming mode status 1	FUZING/ ARMING MODE STATUS, TABLE B- XXXVIII	Shall be used by stores, when requested by the aircraft, to reflect the actual internal state of the fuzing/arming setting(s) whether or not demanded by TABLE B- XXXVII.
11	Fuzing/arming mode status 2	FUZING/ ARMING MODE STATUS, TABLE B- XLIV	(when requested by the aircraft) Actual internal state of the store's fuzing/arming setting(s), whether or not demanded by TABLE B- XLIII.
12	Arm delay from release	TIME(F), TABLE B- XXVII	Shall be used by stores with interface controllable fuzing as the time delay from separation from the aircraft to fuze arming.

TABLE B- XXVI. Data entity list. (Continued)

Line no.	Data entity name	Entity Type and Table number	Entity shall comply with the following requirements and description:
13	Fuze function delay from release	TIME(F), TABLE B- XXVII	Shall be used by stores with interface controllable fuzing as the time delay from separation from the aircraft to fuze function.
14	Fuze function delay from impact	TIME(F), TABLE B- XXVII	Shall be used by stores with interface controllable fuzing as the time delay from impact to fuze function.
15	Post launch operation delay MSP and LSP	TIME(M) & TIME(L), TABLE B- XXVII	The delays required in operation of store assemblies, such as motor fire, flight control, etc. Shall not be used for fuzing/arming.
16	High drag arm time	TIME(F), TABLE B- XXVII	(for stores with interface controllable fuzing) Time delay from store separation from the aircraft to fuze arming when store retardation is selected.
17	Function time from event	TIME(F), TABLE B- XXVII	(for stores with interface controllable fuzing) Time delay from a specifically defined event to the function of the fuze or store retard mechanism.
18	Fuze function distance	DISTANCE(F), TABLE B- XXVII	Shall be used by stores with interface controllable fuzing as the distance from the target required for function. When used for Fuze function height, it represents altitude or depth from local surface required for function. For pressure activated sensors, a surface air pressure of 82 kilopascals shall be assumed.
19	deleted		
20	Fire interval	TIME(L), TABLE B- XXVII	Shall be used to set the time interval between successive releases, launches or firings of associated munitions or submunitions.
21	Number to fire	NUMBER(L), TABLE B- XXVII	Shall be used to set the number of munitions or submunitions to be released or fired for each release or fire commanded by TABLE B- XXXII, bit number 00.
22	Rounds remaining	NUMBER(L), TABLE B- XXVII	The number of submunitions or stores remaining within the store.
23	Void/layer number	NUMBER(L), TABLE B- XXVII	(for stores with interface controllable fuzing) Void/layer number at which the fuze is to function.
24	Impact velocity	VELOCITY(M), TABLE B- XXVII	Sets the impact velocity.
25	Protocol status	PROTOCOL STATUS, TABLE B- XXXIX	Shall be used to report data bus interface protocol errors detected by the applicable subsystem. (See B.4.1.5.1.)

TABLE B- XXVI. Data entity list. (Continued)

Line no.	Data entity name	Entity Type and Table number	Entity shall comply with the following requirements and description:
26	Country code	COUNTRY CODE, TABLE B- XIV	Shall use the appropriate country code specified in ISO 3166, upper case alphabetic characters only. Shall be used as a qualifier of STORE IDENTITY (BINARY) and STORE IDENTITY (ASCII) to distinguish between store identities which may be duplicative between different countries.
27	Store identity (binary)	STORE IDENT-ITY (BINARY), TABLE B- XV	A binary code assigned by the control point for store nomenclature. When this entity is not used, the word shall be set to 0000 hexadecimal.
28	Store or aircraft identity (ASCII)	STORE OR AIRCRAFT IDENTITY (ASCII), TABLE B- XVI	A code assigned by the control point for nomenclature. It shall be left justified into the eight data words (max. 16 characters) per TABLE B- XIII. Unused characters shall be set to ASCII space (20 Hexadecimal). When this entity is not used, the words shall be set to 0000 hexadecimal.
29	Store configuration identifier	ASCII PACKED, TABLE B- XL	Specific configuration information about a store, such as the software version installed. It shall be left justified into the three data words (max. 6 characters) per TABLE B- XIII. Unused characters shall be set to ASCII space (20 Hexadecimal). When this entity is not used, the words shall be set to 0000 hexadecimal.
30	Maximum interruptive BIT time	TIME(F), TABLE B- XXVII	The maximum time duration the store may be non-operational while conducting interruptive Built-In-Test (BIT) commanded by the aircraft. If interruptive BIT is not used by the store, the word shall be set to 0000 hexadecimal.
31	ASCII characters	ASCII PACKED, TABLE B- XL	Shall be used for the transfer of ASCII encoded characters on the data bus.
32	Indicated airspeed MSP & LSP	VELOCITY(M) & VELOCITY(L), TABLE B- XXVII	Indicated airspeed of the aircraft, represented as positive when the aircraft is traveling through static air in the X_a direction defined in FIGURE B- 2.
33	True airspeed MSP & LSP	VELOCITY(M) & VELOCITY(L), TABLE B- XXVII	True airspeed of the aircraft, represented as positive when the aircraft is traveling through static air in the X_a direction defined in FIGURE B- 2.
34	Calibrated airspeed MSP & LSP	VELOCITY(M) & VELOCITY(L), TABLE B- XXVII	Calibrated airspeed of the aircraft, represented as positive with the aircraft traveling through static air in the X_a direction defined in FIGURE B- 2.
35	Windspeed North MSP & LSP	VELOCITY(M) & VELOCITY(L), TABLE B- XXVII	Local windspeed with north defined as the component measured relative to local surface in the north (N) axis as defined by FIGURE B- 3.

TABLE B- XXVI. Data entity list. (Continued)

Line no.	Data entity name	Entity Type and Table number	Entity shall comply with the following requirements and description:
36	Windspeed East MSP & LSP	VELOCITY(M) & VELOCITY(L), TABLE B- XXVII	Local windspeed with east defined as the component measured relative to local surface in the east (E) axis as defined by FIGURE B- 3.
37	Angle of attack	ANGLE(M), TABLE B- XXVII	Angle of attack of the aircraft (also called alpha, the angle between aircraft zero reference line and the air flow).
38	Angle of sideslip	ANGLE(M), TABLE B- XXVII	Angle of sideslip of the aircraft.
39	Air temperature	TEMPERATURE, TABLE B- XXVII	Ambient temperature of the outside air.
40	Dynamic air pressure MSP & LSP	PRESSURE(M) & PRESSURE(L), TABLE B- XXVII	Dynamic air pressure.
41	Static air pressure MSP & LSP	PRESSURE(M) & PRESSURE(L), TABLE B- XXVII	Static air pressure.
42	Sea level air pressure MSP & LSP	PRESSURE(M) & PRESSURE(L), TABLE B- XXVII	Local sea level air pressure.
43	Surface flow North MSP & LSP	VELOCITY(M) & VELOCITY(L), TABLE B- XXVII	North component of the velocity of the local surface flow relative to a fixed point but using the local vertical earth axis system as specified in FIGURE B- 3.
44	Surface flow East MSP & LSP	VELOCITY(M) & VELOCITY (L), TABLE B- XXVII	East component of the velocity of the local surface flow relative to a fixed point using the local vertical earth axis system as specified in FIGURE B- 3.
45	Water temperature	TEMPERATURE, TABLE B- XXVII	Temperature of the local surface of the water.
46	Depth of water MSP & LSP	DISTANCE(M) & DISTANCE(L), TABLE B- XXVII	Vertical depth of water in the target zone.
47	Wave height	DISTANCE(S), TABLE B- XXVII	Average wave height measure peak-to-trough in the target zone and shall be represented as positive.
48	Water density	RATIO, TABLE B- XXVII	Ratio of the density of the local water to a density of 1000 kilograms per cubic meter. The ratio shall increase for heavier local water.
49	Velocity of sound MSP & LSP	VELOCITY(M) & VELOCITY(L), TABLE B- XXVII	Velocity of sound for the specified area. (This may be for a specified depth of water for example.)

TABLE B- XXVI. Data entity list. (Continued)

Line no.	Data entity name	Entity Type and Table number	Entity shall comply with the following requirements and description:
50	Aircraft latitude MSP & LSP	ANGLE(M) & ANGLE(L), TABLE B- XXVII	Geodetic latitude of the aircraft as defined in FIGURE B- 3.
51	Aircraft longitude MSP & LSP	ANGLE(M) & ANGLE(L), TABLE B- XXVII	Geodetic longitude of the aircraft as defined in FIGURE B- 3.
52	Aircraft geodetic altitude MSP & LSP	DISTANCE(M) & DISTANCE(L), TABLE B- XXVII	Geodetic altitude of the aircraft from the reference ellipsoid as defined in FIGURE B- 3.
53	Aircraft-fixed point distance North MSP & LSP	DISTANCE(M) & DISTANCE(L), TABLE B- XXVII	North component (N_a) of the current aircraft position displacement from the fixed point as shown in FIGURE B- 4. The coordinate system shall be the local fixed point earth axis system defined in FIGURE B- 3.
54	Aircraft-fixed point distance East MSP & LSP	DISTANCE(M) & DISTANCE (L), TABLE B- XXVII	East component (E_a) of the current aircraft position displacement from the fixed point as shown in FIGURE B- 4. Coordinate system shall be the local fixed point earth axis system defined in FIGURE B- 3.
55	Aircraft-fixed point distance down MSP & LSP	DISTANCE(M) & DISTANCE(L), TABLE B- XXVII	Down component (D_a) of the current aircraft position displacement from the fixed point as shown in FIGURE B- 4. Coordinate system shall be the local fixed point earth axis system defined in FIGURE B- 3.
56	Height above ground level MSP & LSP	DISTANCE(M) & DISTANCE(L), TABLE B- XXVII	Height above ground level of the aircraft, defined as the distance between the aircraft and the local earth surface measured along the down (D) axis defined in FIGURE B- 3. The distance shall be represented as positive.
57	Barometric altitude MSP & LSP	DISTANCE(M) & DISTANCE(L), TABLE B- XXVII	Barometric altitude of the aircraft, defined as the distance between the aircraft and the local earth sea-level measured along the down (D) axis defined in FIGURE B- 3. The distance shall be represented as positive.
58	Aircraft true heading	ANGLE(M), TABLE B- XXVII	Heading of the aircraft relative to true north as defined in FIGURE B- 5 using the local vertical axis as defined in FIGURE B- 3.
59	Aircraft true ground track	ANGLE(M), TABLE B- XXVII	Ground track of the aircraft relative to true north as defined in FIGURE B- 5 using the local vertical axis as defined in FIGURE B- 3.

TABLE B- XXVI. Data entity list. (Continued)

Line no.	Data entity name	Entity Type and Table number	Entity shall comply with the following requirements and description:
60	Aircraft pitch	ANGLE(M), TABLE B- XXVII	Pitch of the aircraft as defined in FIGURE B- 5 using the local vertical axis defined in FIGURE B- 3.
61	Aircraft roll	ANGLE(M), TABLE B- XXVII	Roll of the aircraft as defined in FIGURE B- 5 using the local vertical axis as defined in FIGURE B- 3.
62	Aircraft magnetic heading	ANGLE(M), TABLE B- XXVII	Heading of the aircraft relative to magnetic north as defined in FIGURE B- 5 using the local vertical axis as defined in FIGURE B- 3.
63	Aircraft-reference X axis offset	DISTANCE(S), TABLE B- XXVII	The X component of the distance from the aircraft body axis or sensor axis to the reference axis $D_x(a \rightarrow r)$ as defined in FIGURE B- 6.
64	Aircraft-reference Y axis offset	DISTANCE(S), TABLE B- XXVII	The Y component of the distance from the aircraft body axis or sensor axis to the reference axis $D_y(a \rightarrow r)$ as defined in FIGURE B- 6.
65	Aircraft-reference Z axis offset	DISTANCE(S), TABLE B- XXVII	The Z component of the distance from the aircraft body axis or sensor axis to the reference axis $D_z(a \rightarrow r)$as defined in FIGURE B- 6.
66	Aircraft-reference axis yaw difference	ANGLE(M), TABLE B- XXVII	The yaw angle between the aircraft body axis or sensor axis and the reference axis as defined by FIGURE B- 6. Positive angles shall indicate the reference axis is yawed right.
67	Aircraft-reference axis pitch difference	ANGLE(M), TABLE B- XXVII	The pitch angle between the aircraft body axis or sensor axis and the reference axis as defined by FIGURE B- 6. Positive angles shall indicate the reference axis is pitched up.
68	Aircraft-reference axis roll difference	ANGLE(M), TABLE B- XXVII	The roll angle between the aircraft body axis or sensor axis and the reference axis as defined by FIGURE B- 6. Positive angles shall indicate the reference axis is banked right (right wing down).
69	Aircraft velocity North MSP & LSP	VELOCITY(M) & VELOCITY(L), TABLE B- XXVII	North component of the velocity of the origin of the aircraft axis system as defined in FIGURE B- 2 using the local vertical earth axis coordinate system as defined in FIGURE B- 3.
70	Aircraft velocity East MSP & LSP	VELOCITY(M), VELOCITY(L), TABLE B- XXVII	East component of the velocity of the origin of the aircraft axis system as defined in FIGURE B- 2 using the local vertical earth axis coordinate system as defined in FIGURE B- 3.
71	Aircraft velocity down MSP & LSP	VELOCITY(M), VELOCITY(L), TABLE B- XXVII	Down component of the velocity of the origin of the aircraft axis system as defined in FIGURE B- 2 using the local vertical earth axis coordinate system as defined in FIGURE B- 3.

TABLE B- XXVI. Data entity list. (Continued)

Line no.	Data entity name	Entity Type and Table number	Entity shall comply with the following requirements and description:
72	Aircraft heading rate	ANGULAR RATE(M), TABLE B- XXVII	Rate of change of the information specified in line 58.
73	Aircraft ground track rate	ANGULAR RATE(M), TABLE B- XXVII	Rate of change of the information specified in line 59.
74	Aircraft pitch rate	ANGULAR RATE(M), TABLE B- XXVII	Rate of change of the information specified in line 60.
75	Aircraft roll rate	ANGULAR RATE(M), TABLE B- XXVII	Rate of change of the information specified in line 61.
76	Aircraft system time at reset	TIME(L) TABLE B- XXVII	Aircraft system time at the last reset of the aircraft system clock used by the aircraft as its reference for time tagging data. Stores using time tagged data shall use this data in conjunction with present system time to determine the age of the time tagged data.
77	Mach number	NUMBER(S), TABLE B- XXVII	Vehicle Mach number.
78	Direction cosine MSP & LSP	FRACTION(M), FRACTION(L), TABLE B- XXVII	A matrix element of a 3x3 transformation matrix between the aircraft and reference coordinate systems in accordance with the following matrix equation: $X_r = C * X_{ap}$; where C is the 3x3 transformation matrix and both X_r and X_{ap} are column vectors as defined in FIGURE B- 6. The quantity and identification of the matrix elements in C and interpretation of the matrix equation shall be defined in the store interface control document.
79	Initialization year	NUMBER(L), TABLE B- XXVII	The current year.
80	Initialization month	NUMBER(L), TABLE B- XXVII	Current month of the current year as specified in line 79.
81	Initialization day of month	NUMBER(L), TABLE B- XXVII	Current day of the current month as specified in line 80.
82	Initialization day of year	NUMBER(L), TABLE B- XXVII	Current day of the current year as specified in line 79 where January 1 is day 1.

TABLE B- XXVI. Data entity list. (Continued)

Line no.	Data entity name	Entity Type and Table number	Entity shall comply with the following requirements and description:
83	Twenty-four hour period	NUMBER(L), TABLE B- XXVII	Used by aircraft or stores; the number of whole 24 hour periods to, or from, the referenced event. It is used as required to compliment the time data entity in line 84..
84	Time MSP, LSP, & LLSP	TIME(M), TIME(L), TIME(LL), TABLE B- XXVII	Used by aircraft or stores; the time to, or from, the referenced event.
85	Time tag	TIME(L), TABLE B- XXVII	Inserted into the message by the source equipment responsible for the data entity(s) on which the time tag is to be used and shall be the aircraft time current at the data measurement or event.
86	Aircraft time	TIME(L), TABLE B- XXVII	Aircraft time to be transmitted to the store to allow base time synchronization to take place. It shall be valid at the zero crossing of the parity bit of the associated command word received at the ASI, with the tolerance specified in the ICD.
87	Representative group envelope delay	TIME(LL), TABLE B- XXVII	Delay to a signal from the signal source to the signal sink.
88	Store repre-sentative group envelope delay	TIME(LL), TABLE B- XXVII	Delay to a signal from the signal source in the store to the MSI or from the MSI to the signal sink in the store.
89	Signal or data latency MSP, LSP, & LLSP	TIME(M), TIME(L) & TIME(LL), TABLE B- XXVII	Latency of the signal or data during transfer between a source and the MSI.
90	Signal or data response time MSP, LSP, & LLSP	TIME(M), TIME(L) & TIME(LL), TABLE B- XXVII	Time between the signal or data at an MSI and its resultant response or event.
91	Signal or data delay time MSP, LSP, & LLSP	TIME(M), TIME(L) & TIME(LL), TABLE B- XXVII	Delay caused to the signal or data during the transfer between a sink and the source.
92	Target time MSP & LSP	TIME(M), TIME(L), TABLE B- XXVII	System time at the point in time when the target position is valid.
93	Waypoint number of target	INTEGER, TABLE B- XXVII	Waypoint number, as specified in line 138, of the target position where a course to target trajectory defined by waypoints is used.

TABLE B- XXVI. Data entity list. (Continued)

Line no.	Data entity name	Entity Type and Table number	Entity shall comply with the following requirements and description:
94	Target file number	NUMBER(L), TABLE B- XXVII	Indicates the selected target file.
95	Target probability	FRACTION(M), TABLE B- XXVII	Probability that the target can be successfully intercepted by the store where all unknown factors are assumed to not adversely affect the probability.
96	Target discriminator	DISCRIMINATOR DESCRIPTION, TABLE B- XLI	Indicates which of a group of targets shall be selected by terminal guidance.
97	Sea level air pressure at target MSP & LSP	PRESSURE(M) & PRESSURE(L), TABLE B- XXVII	Sea-level referenced air pressure at the target position.
98	Current active target number	NUMBER(L), TABLE B- XXVII	Target number for which all information received by the store applys, and which also is the preferred target once the store is released. Stores implementing multiple targeting shall assume that information received corresponds to the last target number received.
99	Target invalidity	INVALIDITY, TABLE B- XXXI	Validity for sixteen targets where valid (logic 0) shall equate to an available-for-use state.
100	Target latitude MSP & LSP	ANGLE(M) & ANGLE(L), TABLE B- XXVII	Geodetic latitude of the target position as defined in FIGURE B- 3.
101	Target longitude MSP & LSP	ANGLE(M) & ANGLE(L), TABLE B- XXVII	Geodetic longitude of the target position as defined in FIGURE B- 3.
102	Target geodetic altitude MSP & LSP	DISTANCE(M) & DISTANCE(L), TABLE B- XXVII	Geodetic altitude of the target position from the reference ellipsoid as defined in FIGURE B- 3.
103	North target distance from fixed point origin MSP & LSP	DISTANCE(M) & DISTANCE(L), TABLE B- XXVII	North component (N_t) of the current target position displacement from the fixed point as shown in FIGURE B- 4. The coordinate system shall be the local fixed point earth axis system defined in FIGURE B- 3.
104	East target distance from fixed point origin MSP & LSP	DISTANCE(M) & DISTANCE(L), TABLE B- XXVII	East component (E_t) of the current target position displacement from the fixed point as shown in FIGURE B- 4. The coordinate system shall be the local fixed point earth axis system defined in FIGURE B- 3.

TABLE B- XXVI. Data entity list. (Continued)

Line no.	Data entity name	Entity Type and Table number	Entity shall comply with the following requirements and description:
105	Target distance down from fixed point origin MSP & LSP	DISTANCE(M) & DISTANCE(L), TABLE B- XXVII	Down component (D_t) of the current target position displacement from the fixed point as shown in FIGURE B- 4. The coordinate system shall be the local fixed point earth axis system defined in FIGURE B- 3.
106	North target distance from current position MSP & LSP	DISTANCE(M) &, DISTANCE(L), TABLE B- XXVII	North component (N_t) of the target position displacement from the current aircraft position as shown in FIGURE B- 8. The coordinate system shall be the local vertical earth axis system defined in FIGURE B- 3.
107	East target distance from current position MSP & LSP	DISTANCE(M) & DISTANCE(L), TABLE B- XXVII	East component (E_t) of the target position displacement from the current aircraft position as shown in FIGURE B- 8. The coordinate system shall be the local vertical earth axis system defined in FIGURE B- 3.
108	Down target distance from current position MSP & LSP	DISTANCE(M), DISTANCE(L), TABLE B- XXVII	Down component (D_t) of the target position displacement from the current aircraft position as shown in FIGURE B- 8. The coordinate system shall be the local vertical earth axis system defined in FIGURE B- 3.
109	Target height from surface MSP & LSP	DISTANCE(M) & DISTANCE(L), TABLE B- XXVII	Vertical displacement of the target position from the local surface level where negative values shall indicate that the position is sub-surface.
110	Target approach true heading	ANGLE(M), TABLE B- XXVII	True heading as defined in FIGURE B- 5 of the final approach course to the target position.
111	Target approach pitch	ANGLE(M), TABLE B- XXVII	Pitch as defined in FIGURE B- 5 of the final approach course to the target position.
112	Target azimuth to aircraft	ANGLE(M), TABLE B- XXVII	Target azimuth as shown in FIGURE B- 9 relative to the aircraft axis system as shown in FIGURE B- 2.
113	Target elevation to aircraft	ANGLE(M), TABLE B- XXVII	Target elevation as shown in FIGURE B- 9 relative to the aircraft axis system as shown in FIGURE B- 2.
114	Target slant range (polar coordinates) MSP & LSP	DISTANCE(M), DISTANCE(L), TABLE B- XXVII	Slant range distance, as shown in FIGURE B- 9, between the aircraft axis system origin, as shown in FIGURE B- 2, and the target center. The slant range shall be represented as positive.
115	Target azimuth to reference system	ANGLE(M), TABLE B- XXVII	Target azimuth as shown in FIGURE B- 9 relative to the reference axis system as shown in FIGURE B- 6.
116	Target elevation to reference system	ANGLE(M), TABLE B- XXVII	Target elevation as shown in FIGURE B- 9 relative to the reference axis system as shown in FIGURE B- 6.

TABLE B- XXVI. Data entity list. (Continued)

Line no.	Data entity name	Entity Type and Table number	Entity shall comply with the following requirements and description:
117	Target latitude rate MSP & LSP	ANGULAR RATE(M) & ANGULAR RATE(L), TABLE B- XXVII	Rate of change of the information specified in line 100.
118	Target longitude rate MSP & LSP	ANGULAR RATE(M) & ANGULAR RATE(L), TABLE B- XXVII	Rate of change of the information specified in line 101.
119	Target geodetic altitude rate of change	VELOCITY(M), TABLE B- XXVII	Rate of change of the information specified in line 102.
120	Target-fixed point distance north rate of change	VELOCITY(M), TABLE B- XXVII	Rate of change of the information specified in line 103.
121	Target-fixed point distance east rate of change	VELOCITY(M), TABLE B- XXVII	Rate of change of the information specified in line 104.
122	Target-fixed point distance down rate of change	VELOCITY(M), TABLE B- XXVII	Rate of change of the information specified in line 105.
123	Target-current position distance North rate of change	VELOCITY(M), TABLE B- XXVII	Rate of change of the information specified in line 106.
124	Target-current position distance East rate of change	VELOCITY(M), TABLE B- XXVII	Rate of change of the information specified in line 107.
125	Target-current position distance down rate of change	VELOCITY(M), TABLE B- XXVII	Rate of change of the information specified in line 108.
126	Target azimuth rate to aircraft	ANGULAR RATE(M), TABLE B- XXVII	Rate of change of the information specified in line 112.

TABLE B- XXVI. Data entity list. (Continued)

Line no.	Data entity name	Entity Type and Table number	Entity shall comply with the following requirements and description:
127	Target elevation rate to aircraft	ANGULAR RATE(M), TABLE B- XXVII	Rate of change of the information specified in line 113.
128	Slant range rate of change	VELOCITY(M), TABLE B- XXVII	Rate of change of the information specified in line 114. Negative slant range rate shall indicate decreasing distance between aircraft and target.
129	Target azimuth rate to reference system	ANGULAR RATE(M), TABLE B- XXVII	Rate of change of the information specified in line 115.
130	Target elevation rate to reference system	ANGULAR RATE(M), TABLE B- XXVII	Rate of change of the information specified in line 116.
131	Emission frequency MSP, LSP & LLSP	FREQUENCY(M), FREQUENCY(L)& FREQUENCY(LL), TABLE B- XXVII	Frequency of the emission(s) of interest.
132	Emission bandwidth MSP, LSP & LLSP	FREQUENCY(M), FREQUENCY(L) & FREQUENCY(LL), TABLE B- XXVII	Frequency bandwidth of the emission(s) of interest.
133	Emission PRF MSP & LSP	FREQUENCY(L) & FREQUENCY(LL), TABLE B- XXVII	Pulse repetition frequency of the emission(s) of interest.
134	Emission pulsewidth MSP & LSP	TIME(L) & TIME(LL), TABLE B- XXVII	Pulsewidth of the emission(s) of interest.
135	Reference code for emission	NUMBER(L), TABLE B- XXVII	Reference code for distinguishing between emitters.
136	Target altitude MSP & LSP	DISTANCE(M) & DISTANCE(L), TABLE B- XXVII	Altitude of the target above mean sea level.
137	Time at waypoint MSP, LSP & LLSP	TIME(M), TIME(L) & TIME(LL), TABLE B- XXVII	Time as specified in line 84 at the required point in time when the waypoint position is achieved.
138	Waypoint number of trajectory	INTEGER, TABLE B- XXVII	Waypoint number for the information in the succeeding data words. Waypoint numbers shall increase for successive points in the store trajectory.

TABLE B- XXVI. Data entity list. (Continued)

Line no.	Data entity name	Entity Type and Table number	Entity shall comply with the following requirements and description:
139	Waypoint file number	NUMBER(L), TABLE B- XXVII	The selected waypoint file.
140	Sea level air pressure at way-point MSP & LSP	PRESSURE(M) & PRESSURE(L), TABLE B- XXVII	Sea-level referenced air pressure at the waypoint position.
141	Fire number of store	NUMBER(L), TABLE B- XXVII	Fire number, if implemented, shall be used by stores in free flight to distinguish themselves from other stores in free flight.
142	Reference for coded transmission	NUMBER(L), TABLE B- XXVII	Reference code for coded transmissions to stores in free flight.
143	Guidance frequency MSP & LSP	FREQUENCY(M) & FREQUENCY(L), TABLE B- XXVII	Frequency used for post release guidance.
144	Guidance bit length MSP & LSP	TIME(L) & TIME(LL), TABLE B- XXVII	Length of time allocated to each data bit in post release guidance emission.
145	Guidance block size	NUMBER(L), TABLE B- XXVII	Number of data bits to be received in the first post release guidance transmission.
146	Waypoint latitude MSP & LSP	ANGLE(M) & ANGLE(L), TABLE B- XXVII	Geodetic latitude of the waypoint position, where latitude is as defined in FIGURE B- 3.
147	Waypoint longitude MSP & LSP	ANGLE(M) & ANGLE(L), TABLE B- XXVII	Geodetic longitude of the waypoint position, where longitude is as defined in FIGURE B- 3.
148	Waypoint geodetic altitude MSP & LSP	DISTANCE(M) & DISTANCE(L), TABLE B- XXVII	Geodetic altitude of the waypoint position from the reference ellipsoid as defined in FIGURE B- 3.
149	Waypoint-fixed point distance north MSP & LSP	DISTANCE(M) & DISTANCE(L), TABLE B- XXVII	North component (N_t) of the current waypoint position displacement from the fixed point as shown in FIGURE B- 4. The coordinate system shall be the local fixed point earth axis system as defined in FIGURE B- 3.
150	Waypoint-fixed point distance east MSP & LSP	DISTANCE(M) & DISTANCE(L), TABLE B- XXVII	East component (E_t) of the current waypoint position displacement from the fixed point as shown in FIGURE B- 4. The coordinate system shall be the local fixed point earth axis system as defined in FIGURE B- 3.

TABLE B- XXVI. Data entity list. (Continued)

Line no.	Data entity name	Entity Type and Table number	Entity shall comply with the following requirements and description:
151	Waypoint-fixed point distance down MSP & LSP	DISTANCE(M) & DISTANCE(L), TABLE B- XXVII	Down component (D_t) of the current waypoint position displacement from the fixed point as shown in FIGURE B- 4. The coordinate system shall be the local fixed point earth axis system as defined in FIGURE B- 3.
152	Waypoint-current position north MSP & LSP	DISTANCE(M) & DISTANCE(L), TABLE B- XXVII	North component (N_t) of the waypoint position displacement from current aircraft position as shown in FIGURE B- 8. The coordinate system shall be the local vertical earth axis system defined in FIGURE B- 3.
153	Waypoint-current position east MSP & LSP	DISTANCE(M) & DISTANCE(L), TABLE B- XXVII	East component (E_t) of the waypoint position displacement from the current aircraft position as shown in FIGURE B- 8. The coordinate system shall be the local vertical earth axis system defined in FIGURE B- 3.
154	Waypoint-current position down MSP & LSP	DISTANCE(M) & DISTANCE(L), TABLE B- XXVII	Down component (D_t) of the waypoint position displacement from the current aircraft position as shown in FIGURE B- 8. The coordinate system shall be the local vertical earth axis system defined in FIGURE B- 3.
155	Waypoint height above surface MSP & LSP	DISTANCE(M) & DISTANCE(L), TABLE B- XXVII	Vertical displacement of the waypoint position from the local surface level where negative values shall indicate that the position is subsurface.
156	Initial store course azimuth	ANGLE(M), TABLE B- XXVII	Azimuth of the initial store trajectory relative to the store axis system as shown in FIGURE B- 7. Initial store trajectory shall be as shown in FIGURE B- 9.
157	Initial store course elevation	ANGLE(M), TABLE B- XXVII	Elevation of the initial store trajectory relative to the store axis system as shown in FIGURE B- 7. Initial store trajectory shall be as shown in FIGURE B- 9.
158	Length of initial store trajectory MSP & LSP	DISTANCE(M) & DISTANCE(L), TABLE B- XXVII	Length of the initial store trajectory. The distance shall be represented as positive.
159	Waypoint number of launch point	INTEGER, TABLE B- XXVII	Waypoint number at which the store is intended to be launched by the aircraft. The waypoint number shall be as specified in line 138 where a course to target trajectory defined by waypoints is used.
160	Launch point latitude MSP & LSP	ANGLE(M) & ANGLE(L), TABLE B- XXVII	Geodetic latitude of the store launch point position, where latitude is defined in FIGURE B- 3.

TABLE B- XXVI. Data entity list. (Continued)

Line no.	Data entity name	Entity Type and Table number	Entity shall comply with the following requirements and description:
161	Launch point longitude MSP & LSP	ANGLE(M) & ANGLE(L), TABLE B- XXVII	Geodetic longitude of the store launch point position, where longitude is defined in FIGURE B- 3.
162	Target area MSP & LSP	AREA(M) & AREA(L), TABLE B- XXVII	Area of the target.
163	Target dimension	NUMBER(L) TABLE B- XXVII	Length and/or breadth of the target.
164	Time at first data link message MSP, LSP, LLSP	TIME(M), TIME(L), TIME(LL), TABLE B- XXVII	Time when the first data link message is passed.
165	Dispersion data	DISPERSION DATA, TABLE B- XLV	Store post-launch horizontal and vertical dispersion requirements with respect to store boresight at launch.
166	Dispersion duration	TIME(L), TABLE B- XXVII	Duration of the store dispersion maneuver.
167	Carriage store S&RE select	UNSIGNED, TABLE B- XXIX	Shall be used to indicate the carriage store S&RE being controlled/monitored when fire is commanded by TABLE B- XXXII, bit number 00.
168	Separation duration	TIME, TABLE B- XLVI zone 1	Minimum time in seconds from detection of umbilical separation to execution of a dispersion maneuver or beginning active guidance. Zone 2 of TABLE B- XLVI shall be zero filled.
169	Separation distance	DISTANCE, TABLE B- XLVI zone 2	Minimum distance in meters to be achieved between aircraft and store before execution of a dispersion maneuver or beginning active guidance. Distance is calculated based on aircraft motion vector at time of umbilical disconnect. Zone 1 of TABLE B- XLVI shall be zero filled.
170	Surface deployment delay	TIME, TABLE B- XLVI zone 1	Minimum time in seconds from detection of umbilical separation to first movement of mission store control surfaces. If Surface deployment delay is not used, zone 2 of TABLE B- XLVI shall be zero filled.
171	Control surface unlock delay	TIME, TABLE B- XLVI zone 2	Minimum time in seconds from detection of umbilical separation to unlock of mission store control surfaces. If Control surface unlock delay is not used, zone 1 of TABLE B- XLVI shall be zero filled.

TABLE B- XXVI. Data entity list. (Continued)

Line no.	Data entity name	Entity Type and Table number	Entity shall comply with the following requirements and description:
172	Store station number	STORE STATION NUMBER TABLE B-XLVIII, ZONE 1	Shall be used to indicate the store station number to which the store is attached. It is to be used only in conjunction with line no. 28.
173	Pylon/Bay identity	PYLON/BAY IDENTITY TABLE B-XLVIII, ZONE 2	Shall be used to indicate the pylon or bay to which the store is attached. It is to be used only in conjunction with line no. 28

TABLE B- XXVII. Linear data entities.

WORD TYPE	FORMAT AS TABLE	MSB VALUE	LSB VALUE
TIME(M) (MICROSECONDS)	B-XXIX (UNSIGNED)	2^{37} (1.37×10^{11})	2^{22} (4.19×10^{6})
TIME(L) (MICROSECONDS)	B-XXIX (UNSIGNED)	2^{21} (2.1×10^{6})	2^{6} (64)
TIME(LL) (MICROSECONDS)	B-XXIX (UNSIGNED)	2^{5} (32)	2^{-10} (9.77×10^{-4})
TIME(F) (MICROSECONDS)	B-XXX (SCIENTIFIC)	INTEGER:$-(2^{11})(-2048)$ EXPONENT: 16^{8}	INTEGER: 2^{0} (1) EXPONENT: 16^{0}
FREQUENCY(M) (MHz)	B-XXIX (UNSIGNED)	2^{24} (1.68×10^{7})	2^{9} (512)
FREQUENCY(L) (MHz)	B-XXIX (UNSIGNED)	2^{8} (256)	2^{-7} (7.8×10^{-3})
FREQUENCY (LL) (MHz)	B-XXIX (UNSIGNED)	2^{-8} (3.9×10^{-3})	2^{-23} (1.19×10^{-7})
DISTANCE(M) (METERS)	B-XXVIII (2's COMPLEMENT)	$-(2^{24})$ (-1.68×10^{7})	2^{9} (512)
DISTANCE(L) (METERS)	B-XXIX (UNSIGNED)	2^{8} (256)	2^{-7} (7.8×10^{-3})
DISTANCE(S) (METERS)	B-XXVIII (2's COMPLEMENT)	$-(2^{8})$ (-256)	2^{-7} (7.8×10^{-3})
DISTANCE(F) (METERS)	B-XXVIII (2's COMPLEMENT)	$-(2^{14})$ (-16384)	2^{-1} (0.5)
VELOCITY(M) (METERS/SECOND)	B-XXVIII (2's COMPLEMENT)	$-(2^{13})$ (-8192)	2^{-2} (0.25)
VELOCITY(L) (METERS/SECOND)	B-XXIX (UNSIGNED)	2^{-3} (0.125)	2^{-18} (3.8×10^{-6})
ACCELERATION(M) (METERS/SECOND^2)	B-XXVIII (2's COMPLEMENT)	$-(2^{10})$ (-1024)	2^{-5} (3.1×10^{-2})
ACCELERATION(L) (METERS/SECOND^2)	B-XXIX (UNSIGNED)	2^{-6} (1.56×10^{-2})	2^{-21} (4.77×10^{-7})
ANGLE(M) (SEMICIRCLES)	B-XXVIII (2's COMPLEMENT)	$-(2^{0})$ (-1)	2^{-15} (3.05×10^{-5})
ANGLE(L) (SEMICIRCLES)	B-XXIX (UNSIGNED)	2^{-16} (1.53×10^{-5})	2^{-31} (4.66×10^{-10})

TABLE B- XXVII. Linear data entities. (continued)

WORD TYPE	FORMAT AS TABLE	MSB VALUE	LSB VALUE
ANGULAR RATE(M) (SEMICIRCLES/SEC)	B-XXVIII (2's COMPLEMENT)	$-(2^{2})$ (-4)	2^{-13} (1.22×10^{-4})
ANGULAR RATE(L) (SEMICIRCLES/SEC)	B-XXIX (UNSIGNED)	2^{-14} (6.10×10^{-5})	2^{-29} (1.86×10^{-9})
TEMPERATURE (DEGREES CELSIUS)	B-XXVIII (2's COMPLEMENT)	$-(2^{11})$ (-2048)	2^{-4} (0.0625)
PRESSURE(M) (KILOPASCALS)	B-XXVIII (2's COMPLEMENT)	$-(2^{15})$ (-32768)	2^{0} (1)
PRESSURE(L) (KILOPASCALS)	B-XXIX (UNSIGNED)	2^{-1} (0.5)	2^{-16} (1.53×10^{-5})
INTEGER	B-XXVIII (2's COMPLEMENT)	$-(2^{15})$ (-32768)	2^{0} (1)
NUMBER(L)	B-XXIX (UNSIGNED)	2^{15} (32768)	2^{0} (1)
NUMBER(S)	B-XXVIII (2's COMPLEMENT)	$-(2^{5})$ (-32)	2^{-10} (9.77×10^{-4})
FRACTION(M)	B-XXVIII (2's COMPLEMENT)	$-(2^{0})$ (-1)	2^{-15} (3.05×10^{-5})
FRACTION(L)	B-XXIX (UNSIGNED)	2^{-16} (1.53×10^{-5})	2^{-31} (4.66×10^{-10})
RATIO	B-XXIX (UNSIGNED)	2^{7} (128)	2^{-8} (3.91×10^{-3})
AREA(M) (SQUARE CENTIMETERS)	B-XXIX (UNSIGNED)	2^{31} (2.14748×10^{9})	2^{16} (65356)
AREA(L) (SQUARE CENTIMETERS)	B-XXIX (UNSIGNED)	2^{15} (32768)	2^{0} (1)

1/ (M) = Most significant part, (L) = Less significant part, (LL) = Lower Least significant part, (F) = Fuze, (S) = Single word format

2/ In a 2's complement number, the first bit has a value of minus twice the magnitude of the next highest order bit. The first bit is sometimes referred to as a sign bit instead of being designated the MSB.

3/ The decimal values in parenthesis are for information only and are approximate in some cases.

TABLE B- XXVIII. 2's complement format.

FIELD NAME	BIT NUMBER	DESCRIPTION
MSB	-00-	MOST SIGNIFICANT DATA BIT
	-01-	
	-02-	
	-03-	
	-04-	
	-05-	
	-06-	
	-07-	
	-08-	
	-09-	
	-10-	
	-11-	
	-12-	
	-13-	
	-14-	
LSB	-15-	LEAST SIGNIFICANT DATA BIT

1/ Bit numbers 00 through 15 shall be encoded in 2's complement format. To obtain a negative of the number, all bits are inverted and one LSB is added to the resulting number.

EXAMPLE: FFFF (hexadecimal) is the 2's complement of 1 (decimal), and therefore indicates -1 (decimal).

2/ The first bit of a two's complement number (bit number 00) is sometimes called the sign bit, as it was in MIL-HDBK-1553. This results in the same bit pattern and is therefore functionally equivalent.

TABLE B- XXIX. Unsigned format.

FIELD NAME	BIT NUMBER	DESCRIPTION
MSB	-00-	MOST SIGNIFICANT DATA BIT
	-01-	
	-02-	
	-03-	
	-04-	
	-05-	
	-06-	
	-07-	
	-08-	
	-09-	
	-10-	
	-11-	
	-12-	
	-13-	
	-14-	
LSB	-15-	LEAST SIGNIFICANT DATA BIT

1/ For applications where an “unsigned" formatted data word is used as the least significant part of a two word data parameter, this least significant word shall be encoded consistent with the encoding of the most significant word in the set. If the most significant word is encoded as a 2's complement, then this least significant word shall represent a continuation of a 2's complemented value.

EXAMPLE: A/ Two word unsigned value:

System time 6,400,000 (decimal) microseconds using TIME(M) and TIME(L) -

MSP = 0001 Hexadecimal

LSP = 86A0 Hexadecimal

EXAMPLE: B/ Two word signed value:

Aircraft distance north of 1967 (decimal) meters using DISTANCE(M) and DISTANCE(L) -

MSP = 0003 Hexadecimal

LSP = D780 Hexadecimal

Aircraft distance north of -1967 (decimal) meters using DISTANCE(M) and DISTANCE(L) -

MSP = FFFC Hexadecimal

LSP = 2880 Hexadecimal

TABLE B- XXX. Binary scientific notation format.

FIELD NAME	BIT NUMBER	DESCRIPTION	
MSB	-00-	= -2048 UNITS	2's COMPLEMENT BINARY INTEGER
	-01-		
	-02-		
	-03-		
	-04-		
	-05-		
	-06-		
	-07-		
	-08-		
	-09-		
	-10-		
LSB	-11-	= 1 UNIT	
EXPONENT MSB	-12-	= 8	BINARY INTEGER
	-13-		
	-14-		
LSB	-15-	= 1	

1/ The value represented by this format is given by:

(Integer) x $16^{(Exponent)}$

EXAMPLE: 0142 (hexadecimal) shall equate to 20 x 16^2 (decimal) or 5120 (decimal)

TABLE B- XXXI. Invalidity word.

FIELD NAME	BIT NUMBER	DESCRIPTION
INVALIDITY	-00-	INVALIDITY OF WORD 1
	-01-	INVALIDITY OF WORD 2
	-02-	INVALIDITY OF WORD 3
	-03-	INVALIDITY OF WORD 4
	-04-	INVALIDITY OF WORD 5
	-05-	INVALIDITY OF WORD 6
	-06-	INVALIDITY OF WORD 7
	-07-	INVALIDITY OF WORD 8
	-08-	INVALIDITY OF WORD 9
	-09-	INVALIDITY OF WORD 10
	-10-	INVALIDITY OF WORD 11
	-11-	INVALIDITY OF WORD 12
	-12-	INVALIDITY OF WORD 13
	-13-	INVALIDITY OF WORD 14
	-14-	INVALIDITY OF WORD 15
	-15-	INVALIDITY OF WORD 16

1/ Invalidity bit set to logic 1 shall indicate that a word is invalid.

2/ For the standard message to/from subaddress 11, the invalidity bits associated with the reserved words and those associated with words that are defined in the system specification or ICD as not used, shall be set to logic 0 (valid).

3/ For the standard message to/from subaddress 11, bits 00 through 15 in the invalidity word shall indicate invalidity of words 1 through 16 in the message and bits 00 through 15 in a second invalidity word shall indicate the invalidity of words 17 through 32 in the message. Bits 14 and 15 in the second word shall only be used during the routing of message to/from a mission store carried on a carriage store and shall be set to logic 0 at all other times.

4/ For user defined messages, utilization and setting of the invalidity bits shall be as defined in the system specification or ICD.

TABLE B- XXXII. Critical control 1.

FIELD NAME	BIT NUMBER	DESCRIPTION
STORE CONTROL	-00-	D_{10} = Fire, Launch, or Release
1/	-01-	D_9 = Jettison
	-02-	D_8 = Commit to Separate Store or Submunition
	-03-	D_7 = Execute Arming
	-04-	D_6 = Preset Arming
	-05-	D_5 = Select Store
	-06-	D_4 = Initiate Interruptive BIT
	-07-	D_3 = Release/launch mode 12/
IDENTIFIER	-08-	D_2
	-09-	D_1 — See 2/
	-10-	D_0
ADDRESS CONFIRM	-11-	A_4 Shall be set to match the logic state of the
	-12-	A_3 corresponding interface address discrete
	-13-	A_2 lines A4 through A0 as specified in 5.1.6
	-14-	A_1 and 5.2.6.
	-15-	A_0

1/ Data bits set to a logic 0 shall indicate that the associated function is required to be inactive. Data bits set to a logic 1 shall indicate that the associated function is required to be active. Data bits reset to a logic 0 shall indicate that the associated function is required to be deactivated as applicable.

2/ The IDENTIFIER FIELD shall be set as indicated below.

D_2	D_1	D_0	
0	0	0	RESERVED
0	0	1	Mission Store
0	1	0	Carriage Store
0	1	1	RESERVED
	thru		
1	1	1	RESERVED

TABLE B- XXXII. Critical control 1. (Continued)

3/ Stores shall discard any message found to contain a critical control word that fails one or more of the protocol checks in B.4.1.5.1. Stores shall only enable safety critical processes demanded by critical control words which pass the protocol checks detailed in B.4.1.5.1.

4/ The probability of inadvertent generation of a valid critical control word with a valid critical authority word and with a data field requesting critical action shall not exceed 1 in 10^5 flight hours per data field combination.

5/ D_{10} when received set to logic 1 shall be used to initiate potentially irreversible firing (including processes such as lasing), launching or release processes. (See 5.2.4.)

6/ D_9 when received set to a logic 1 shall be used by the store to initiate jettison processes.

7/ D_8 when received set to a logic 1 shall be used to initiate potentially irreversible processes associated with arming or to prepare for a store separation demand. (See 5.2.4.)

8/ D_7 when received set to a logic 1 shall be used to initiate reversible arming or safety degradation processes.

9/ D_6 when received set to a logic 1 shall be used to preset the arming processes or safety degradation processes.

10/ D_5 when received set to a logic 1 shall be used to initiate store activity.

11/ D_4 when received set to a logic 1 shall be used to initiate built-in-test processes that may interrupt store subsystem operation. The built-in-test shall not, however, prevent the store from communicating with the aircraft on the data bus interface while BIT is in process.

12/ The Release/launch mode field shall be set as follows:
D_3 set to logic 0 indicates mission store to be released from a rack.
D_3 set to logic 1 indicates mission store to be launched by forward firing from a rail launcher.

TABLE B- XXXIII. Critical control 2.

FIELD NAME	BIT NUMBER	DESCRIPTION
STORE CONTROL	-00-	D_{10} = Erase command/authority
1/	-01-	D_9 = RF jam command/authority
	-02-	D_8 = RF emission activate command/authority
	-03-	D_7 = RESERVED. Shall be set to logic 0.
	-04-	D_6 = RESERVED. Shall be set to logic 0
	-05-	D_5 = RESERVED. Shall be set to logic 0
	-06-	D_4 = RESERVED. Shall be set to logic 0
	-07-	D_3 = RESERVED. Shall be set to logic 0
IDENTIFIER	-08-	D_2
	-09-	D_1 — See 2/
	-10-	D_0
ADDRESS CONFIRM	-11-	A_4 — Shall be set to match the logic state of the
	-12-	A_3 corresponding interface address discrete
	-13-	A_2 lines A4 through A0 as specified in 5.1.6
	-14-	A_1 and 5.2.6.
	-15-	A_0

1/ Data bits set to a logic 0 shall indicate that the associated function is required to be inactive. Data bits set to a logic 1 shall indicate that the associated function is required to be active. Data bits reset to a logic 0 shall indicate that the associated function is required to be deactivated as applicable.

2/ The IDENTIFIER FIELD shall be set as indicated below.

D_2	D_1	D_0	
0	0	0	RESERVED
0	0	1	Mission Store
0	1	0	Carriage Store
0	1	1	RESERVED
	thru		
1	1	1	RESERVED

3/ Stores shall discard any message found to contain a critical control word that fails one or more of the protocol checks in paragraph B.4.1.4. Stores shall only enable safety critical processes demanded by critical control words which pass the protocol checks detailed in B.4.1.4.

TABLE B- XXXIV. Critical authority.

FIELD NAME	BIT NUMBER	DESCRIPTION
CODED CHECK	-00-	$C_{14} = D_{10} + D_9 + D_6 + D_1 + D_0$
	-01-	$C_{13} = D_9 + D_8 + D_5 + D_0$
	-02-	$C_{12} = D_8 + D_7 + D_4$
	-03-	$C_{11} = D_7 + D_6 + D_3$
	-04-	$C_{10} = D_{10} + D_9 + D_5 + D_2 + D_1 + D_0$
	-05-	$C_9 = D_{10} + D_8 + D_6 + D_4$
	-06-	$C_8 = D_{10} + D_7 + D_6 + D_5 + D_3 + D_1 + D_0$
	-07-	$C_7 = D_{10} + D_5 + D_4 + D_2 + D_1$
	-08-	$C_6 = D_{10} + D_6 + D_4 + D_3$
	-09-	$C_5 = D_9 + D_5 + D_3 + D_2$
	-10-	$C_4 = D_{10} + D_9 + D_8 + D_6 + D_4 + D_2 + D_0$
	-11-	$C_3 = D_9 + D_8 + D_7 + D_5 + D_3 + D_1$
	-12-	$C_2 = D_{10} + D_9 + D_8 + D_7 + D_4 + D_2 + D_1$
	-13-	$C_1 = D_{10} + D_8 + D_7 + D_3$
	-14-	$C_0 = D_{10} + D_7 + D_2 + D_1 + D_0$
RESERVED	-15-	RESERVED. Shall be set to logic 0

1/ Coded check bits shall be generated using modulo 2 arithmetic.

2/ D_0 through D_{10} refer to bits D_0 through D_{10} as defined in TABLE B-XXXII and TABLE B- XXXIII, as applicable.

3/ The coded check bits are based on the BCH 31, 16, 3 polynomial:

$$X^{15} + X^{11} + X^{10} + X^9 + X^8 + X^7 + X^5 + X^3 + X^2 + X + 1$$

TABLE B- XXXV. Critical monitor 1.

FIELD NAME	BIT NUMBER	DESCRIPTION
STORE STATE	-00-	Fired, Launched or Released
1/	-01-	Jettisoned
	-02-	Committed to Store or Submunitions Separation
	-03-	Armed
	-04-	Arming Preset
	-05-	Store Selected
	-06-	Store in Interruptive BIT
	-07-	Store to be released/launched. (See Note 3)
DEMANDED STATE	-08-	D_{10}
2/	-09-	D_9
	-10-	D_8
	-11-	D_7
	-12-	D_6
	-13-	D_5
	-14-	D_4
	-15-	D_3

1/ Bit numbers 00 through 07, set to logic 1, shall indicate that the associated store state is true.

2/ The demanded state shall be a monitor of the last received state demanded of the store in Critical Control 1 (TABLE B- XXXII).

3/ The Release/launch mode field shall be set as follows:
D_3 set to logic 0 indicates mission store to be released from a rack.
D_3 set to logic 1 indicates mission store to be launched by forward firing from a rail launcher.

TABLE B- XXXVI. Critical monitor 2.

FIELD NAME	BIT NUMBER	DESCRIPTION
STORE STATE	-00-	Erase on/authorized.
1/	-01-	RF jam on/authorized.
	-02-	RF emission on/authorized.
	-03-	RESERVED. Shall be set to logic 0.
	-04-	RESERVED. Shall be set to logic 0.
	-05-	RESERVED. Shall be set to logic 0.
	-06-	RESERVED. Shall be set to logic 0.
	-07-	RESERVED. Shall be set to logic 0.
DEMANDED STATE	-08-	D_{10}
2/	-09-	D_9
	-10-	D_8
	-11-	D_7
	-12-	D_6
	-13-	D_5
	-14-	D_4
	-15-	D_3

1/ Bit numbers 00 through 07, set to logic 1, shall indicate that the associated store state is true.

2/ The demanded state shall be a monitor of the last received state demanded of the store in Critical Control 2 (TABLE B- XXXIII).

TABLE B- XXXVII. Fuzing mode 1.

FIELD NAME	BIT NUMBER	DESCRIPTION
FUZE CONTROL	-00-	D_{15} = Function at impact.
	-01-	D_{14} = Function on time after release **2/**
	-02-	D_{13} = Function on time after impact **3/**
	-03-	D_{12} = Function at altitude **4/**
	-04-	D_{11} = Function at depth **4/**
	-05-	D_{10} = Function on proximity **4/**
	-06-	D_9 = Function at position of target.
	-07-	D_8 = Function on interference.
	-08-	D_7 = Function on void **5/**
	-09-	D_6 = Function on layer **5/**
	-10-	D_5 = Low voltage detect.
	-11-	D_4 = Long delay enable.
	-12-	D_3 = Function at height **4/**
	-13-	D_2 = RESERVED. Shall be set to logic 0.
	-14-	D_1 = RESERVED. Shall be set to logic 0.
	-15-	D_0 = RESERVED. Shall be set to logic 0.

1/ Data bits set to a logic 1 shall indicate that the associated function is required to be active.

2/ The designated time is given in data word 10 of TABLE B- XI.

3/ The designated time is given in data word 11 of TABLE B- XI.

4/ The designated distance is given in data word 12 of TABLE B- XI.

5/ The designated number is given in data word 17 [Note 33.] of TABLE B- XI.

TABLE B- XXXVIII. Fuzing/arming mode status 1.

FIELD NAME	BIT NUMBER	DESCRIPTION
STORE STATE	-00-	Function at impact is set.
	-01-	Function on time after release is set.
	-02-	Function on time after impact is set.
	-03-	Function at altitude is set.
	-04-	Function at depth is set.
	-05-	Function on proximity is set.
	-06-	Function at position of target is set.
	-07-	Function on interference is set.
	-08-	Function on void is set.
	-09-	Function on layer is set.
	-10-	Function on low voltage is set.
	-11-	Long delay is set.
	-12-	Function at height is set.
	-13-	RESERVED. Shall be set to logic 0.
	-14-	RESERVED. Shall be set to logic 0.
	-15-	RESERVED. Shall be set to logic 0.

1/ Bit numbers 00 through 15 of both Fuzing/arming mode status 1 and Fuzing/arming mode status 2, all set to Logic 0, shall indicate that the store is safe.

2/ Bit numbers 00 through 15, set to logic 1, shall indicate that the associated store state is true.

TABLE B- XXXIX. Protocol status.

FIELD NAME	BIT NUMBER	DESCRIPTION
ERROR FLAG	-00-	Commanded word count not implemented.
1/	-01-	Illegal header for commanded subaddress.
	-02-	Message checksum failure.
	-03-	Critical control/authority 1 failure.
	-04-	Critical control/authority 2 failure.
	-05-	RESERVED. Shall be set to logic 0.
	-06-	RESERVED. Shall be set to logic 0.
	-07-	RESERVED. Shall be set to logic 0.
	-08-	RESERVED. Shall be set to logic 0.
	-09-	RESERVED. Shall be set to logic 0.
	-10-	RESERVED. Shall be set to logic 0.
SUBADDRESS	-11-	MSB = 16
1/	-12-	Subaddress of last erroneous
	-13-	message.
	-14-	
	-15-	LSB = 1

1/ Error flag data bit(s) set to logic 1 shall designate the error(s) detected in the last erroneous message received by the subsystem. Bit numbers 11 through 15 shall designate the subaddress of this last erroneous message. Subsequent receipt of an error-free message to this designated subaddress shall result in resetting of this data word to 0000 hexadecimal.

TABLE B- XL. ASCII packed.

FIELD NAME	BIT NUMBER	DESCRIPTION
CHARACTER 1 1/	-00-	(Shall be set to logic 0)
	-01-	High Order Bit
	-02-	
	-03-	
	-04-	
	-05-	
	-06-	
	-07-	Low Order Bit
CHARACTER 2	-08-	(Shall be set to logic 0)
	-09-	High Order Bit
	-10-	
	-11-	
	-12-	
	-13-	
	-14-	
	-15-	Low Order Bit

1/ The characters shall be represented by the American National Standard for Information Interchange (ASCII) character code set defined in ANSI X3.4.

TABLE B- XLI. Discriminator description.

FIELD NAME	BIT NUMBER	DESCRIPTION
DISCRIMINATOR ENABLES 1/	-00-	Store should select target by position.
	-01-	Store should select target by size.
	-02-	Store should select targets by size and then target by position.
TARGET POSITION IN GROUP (Operative when bit 00 or 02 = logic 1.) 2/	-03-	MSB = 8
	-04-	Indicates the sector (1 of 16) of the pattern (FIGURE B- 10) in which the target is positioned.
	-05-	
	-06-	LSB = 1
	-07-	MSB = 2
	-08-	LSB = 1
		Indicates the segment (1 of 4) of the pattern (FIGURE B- 10) in which the target is positioned.
NUMBER OF TARGETS IN GROUP	-09-	MSB = 8
	-10-	Indicates the number of targets in the group. To be used in conjunction with bits 13-15 inclusive, when bit 01 = logic 1.
	-11-	
	-12-	LSB = 1
TARGET SIZE IN GROUP (Operative when bit 01 = logic 1.)	-13-	MSB = 4
		Shall indicate the number of the target when the smallest = one.
TARGET SIZE IN GROUP (Operative when bit 02 = logic 1.)	-14-	Shall indicate the targets' size in the group when the smallest = one.
	-15-	LSB = 1

1/ Data bits set to a logic 1 shall indicate that the associated function is true.

2/ FIGURE B- 10 illustrates the way in which this target position procedure should be employed.

TABLE B- XLII. Header word definition.

BIT NUMBER	DESCRIPTION		
-00-	MSB =	8	Most significant hexadecimal digit
-01-		4	
-02-		2	
-03-	LSB =	1	
-04-	MSB =	8	
-05-		4	
-06-		2	
-07-	LSB =	1	
-08-	MSB =	8	
-09-		4	
-10-		2	
-11-	LSB =	1	
-12-	MSB =	8	Least significant hexadecimal digit
-13-		4	
-14-		2	
-15-	LSB =	1	

TABLE B- XLIII. Fuzing mode 2.

FIELD NAME	BIT NUMBER	DESCRIPTION
FUZE CONTROL 1/	-00-	D_{15} = RESERVED. Shall be set to logic 0.
	-01-	D_{14} = RESERVED. Shall be set to logic 0.
	-02-	D_{13} = RESERVED. Shall be set to logic 0.
	-03-	D_{12} = RESERVED. Shall be set to logic 0.
	-04-	D_{11} = RESERVED. Shall be set to logic 0.
	-05-	D_{10} = RESERVED. Shall be set to logic 0.
	-06-	D_9 = RESERVED. Shall be set to logic 0.
	-07-	D_8 = RESERVED. Shall be set to logic 0.
	-08-	D_7 = Enable store retard mechanism. 2/
	-09-	D_6 = Enable post release fuze control.
	-10-	D_5 = RESERVED. Shall be set to logic 0.
	-11-	D_4 = RESERVED. Shall be set to logic 0.
	-12-	D_3 = RESERVED. Shall be set to logic 0.
	-13-	D_2 = RESERVED. Shall be set to logic 0.
	-14-	D_1 = RESERVED. Shall be set to logic 0.
	-15-	D_0 = RESERVED. Shall be set to logic 0.

1/ Data bits set to a logic 1 shall indicate that the associated function is required to be active.

2/ Any designated time is given in data word 16 of TABLE B- XI.

TABLE B- XLIV. Fuzing/arming mode status 2.

FIELD NAME	BIT NUMBER	DESCRIPTION
STORE STATE 1/	-00-	RESERVED. Shall be set to logic 0.
	-01-	RESERVED. Shall be set to logic 0.
	-02-	RESERVED. Shall be set to logic 0.
	-03-	RESERVED. Shall be set to logic 0.
	-04-	RESERVED. Shall be set to logic 0.
	-05-	RESERVED. Shall be set to logic 0.
	-06-	RESERVED. Shall be set to logic 0.
	-07-	RESERVED. Shall be set to logic 0.
	-08-	Store retard mechanism is enabled
	-09-	Post release fuze control is enabled.
	-10-	RESERVED. Shall be set to logic 0.
	-11-	RESERVED. Shall be set to logic 0.
	-12-	RESERVED. Shall be set to logic 0.
	-13-	RESERVED. Shall be set to logic 0.
	-14-	RESERVED. Shall be set to logic 0.
	-15-	RESERVED. Shall be set to logic 0.

1/ Bit numbers 00 through 15 of both Fuzing/arming mode status 1 and Fuzing/arming mode status 2, all set to Logic 0, shall indicate that the store is safe.

2/ Bit numbers 00 through 15, set to Logic 1, shall indicate that the associated store state is true.

TABLE B- XLV. Dispersion data word.

FIELD NAME	BIT NUMBER	DESCRIPTION
Horizontal dispersion	-00-	Left
1/	-01-	Right
Horizontal dispersion angle	-02-	MSB = 2^{-2}
2/	-03-	
	-04-	
	-05-	Horizontal dispersion angle
	-06-	
	-07-	LSB = 2^{-7}
Vertical dispersion	-08-	Up
1/	-09-	Down
Vertical dispersion angle	-10-	MSB = 2^{-2}
3/	-11-	
	-12-	Vertical dispersion angle
	-13-	
	-14-	
	-15-	LSB = 2^{-7}

1/ One data bit only shall be set to indicate the associated dispersion requirement. Neither data bit set shall indicate no dispersion requirement. If both data bits are set the word shall be rejected. If dispersion is requested with the associated dispersion angle invalid then the word shall be rejected.

2/ An unsigned binary count of bits 02 to 07 shall be used in conjunction with bits 00 and 01 to specify the required horizontal angular dispersion in semicircles. All bits set at logic 0 or logic 1 shall signify an invalid dispersion angle. If an angular dispersion is defined in this field with no associated horizontal dispersion requirement then the word shall be rejected.

3/ An unsigned binary count of bits 10 to 15 shall be used in conjunction with bits 08 and 09 to specify the required vertical angular dispersion in semicircles. All bits set at logic 0 or 1 shall signify an invalid dispersion angle. If an angular dispersion is defined in this field with no associated vertical dispersion requirement then the word shall be rejected.

TABLE B- XLVI. Two zone format.

FIELD NAME	BIT NUMBER	DESCRIPTION
ZONE 1	-00-	MSB
	-01-	
	-02-	
	-03-	2/
	-04-	
	-05-	
	-06-	
	-07-	LSB
ZONE 2	-08-	MSB
	-09-	
	-10-	
	-11-	2/
	-12-	.
	-13-	
	-14-	
	-15-	LSB

1/ The data in zone 1 shall be independent of the data in zone 2, i.e., no attempt shall be made to combine zone 1 and zone 2 to form a single entity.

2/ Actual values for the most significant bit and least significant bit are defined in the system specification or ICD.

TABLE B- XLVII. Aircraft description message. 1/

WORD NO.	DESCRIPTION/COMMENT	PARAGRAPH or TABLE
-CW-	COMMAND WORD (Subaddress 00001 Binary)	B.4.1.1
-01-	HEADER (0421 hexadecimal)	B.4.2.1.1
-02-	Invalidity for words 01-16	TABLE B- XXVI line 2
-03-	Invalidity for words 17-30 [Note 34.]	TABLE B- XXVI line 2
-04-	Country code	TABLE B- XXVI line 26
-05-	Aircraft identity (ASCII) 1	TABLE B- XXVI line 28
-06-	Aircraft identity (ASCII) 2	TABLE B- XXVI line 28
-07-	Aircraft identity (ASCII) 3	TABLE B- XXVI line 28
-08-	Aircraft identity (ASCII) 4	TABLE B- XXVI line 28
-09-	Aircraft identity (ASCII) 5	TABLE B- XXVI line 28
-10-	Aircraft identity (ASCII) 6	TABLE B- XXVI line 28
-11-	Aircraft identity (ASCII) 7	TABLE B- XXVI line 28
-12-	Aircraft identity (ASCII) 8	TABLE B- XXVI line 28
-13-	Station number and pylon/bay identity	TABLE B- XXVI lines 172 & 173
-14-		
-15-		
-16-		
-17-		
-18-		
-19-		
-20-		
-21-		
-22-		
-23-	Reserved words (0000 hexadecimal)	TABLE B- XXVI line 1
-24-		
-25-		
-26-		
-27-		
-28-		
-29-		
-30-	Checksum word	B.4.1.5.2.1
-SW-	STATUS WORD	B.4.1.2

1/ The message format shown is for BC-RT transfers.

TABLE B- XLVIII. Store station number and pylon/bay identity.

FIELD NAME	BIT NUMBER	DESCRIPTION
ZONE 1 STORE STATION NUMBER	-00- -01- -02- -03- -04- -05- -06- -07-	MSB = 128 LSB = 1
ZONE 2 PYLON/BAY IDENTITY 2/	-08- -09- -10- -11- -12- -13- -14- -15-	Shall be set to logic 0 High Order Bit Low Order Bit

1/ Bit number 08 shall be set to logic 0.

2/ PYLON/BAY IDENTITY shall be represented by the ASCII character code set defined in ANSI X3.4. Alphabetic characters shall be uppercase.

ANNOTATIONS EXPLAINING DIFFERENCES FROM REVISION C NOTICE 1.

APPENDIX C

This listing is only a summary and does not include all changes. Note numbers in this list correspond to the [Note #] comments in the body of this document.

[Note 1.] The table of contents was revised as part of Revision D but changes are not marked.
Page iii

[Note 2.] Specification and standards references were updated to recognize revised document numbers and incorporate references to sources for documents on the World Wide Web. The new documents are intended to be direct replacements for the old ones.
Page 2

[Note 3.] The definition of Class II and Class IIA are changed in Rev D to be compatible with the new 270 V dc power requirements.
Pages 7, 155

[Note 4.] The asterisks were modified and a new footnote added to refer to the new 270 V dc power requirements.
Pages 9, 10

[Note 5.] The last sentence was replaced to clarify. No technical change was intended.
Pages 13, 14

[Note 6.] New requirements on 270 V dc power were added. The SAE recommended changes included the statement: “If the aircraft is required to be compatible with pre MIL-STD-1760D stores and stores implementing MIL-STD-1760D and up, it shall supply both 270 V dc and 115/200 V ac power;” however, this would require future aircraft to have both sources, even though an aircraft with only 115 V ac would provide full compatibility. This issue is discussed in MIL-HDBK-1760, along with other issues of compatibility between versions of the standard.
Pages 13, 14

[Note 7.] Notation was revised for clarity. No technical change was intended.
Pages 17, 18

[Note 8.] Notation and wording of the notes was revised for clarity, but no technical change was intended.
Page 17

[Note 9.] Limits were extended to –400 ns and +400 ns, notation and wording of the notes was revised for clarity.
Page 18

[Note 10.] The break point at 625 kHz was at 1.25 MHz in Rev C. This change was made to better match the requirement to the performance of real systems.
Page 21

[Note 11.] The data bus zero crossing deviation is changed to 120 ns. The old 150 ns requirement (up through Rev B of the standard) was determined to be inappropriate, and there were proposals to change it to 90 ns or 120 ns in Rev C. The standard was changed to 90 ns in Rev C, but the handbook was written to reflect the rationale for 120 ns. This discrepancy was reassessed in 2002 and it was determined that the 120 ns requirement is most appropriate. (See SAE AS-1B2 minutes for Sep 02).
Page 24, 48

[Note 12.] The first sentence was re-worded to clarify the intent. A new requirement was added, limiting voltage drop while carrying rated current to 0.2 V. This was added to provide specific, measurable criteria for verifying structure ground integrity.
Page 29

[Note 13.] The last sentence was deleted to eliminate reference to “valid” load conditions. The requirement remains the same without this statement and deleting this statement eliminates the need to define what loads are valid.
Pages 30, 34

[Note 14.] This paragraph was reworded to eliminate references to “valid” load conditions and clarify. No change of the actual interface requirement was intended.
Pages 30, 34, 34

[Note 15.] Figure 17 and 18 now have equations defining the curved portion of the maximum load current and maximum overcurrent limits. The actual limits on 28 V dc and 115 V ac current did not change.
Pages 31, 32

[Note 16.] Figure was added as part of the new 270 V dc power requirements.
Pages 31, 32

[Note 17.] New requirements on 270 V dc power were added in this paragraph and subparagraphs.
Pages 35, 44, 54

[Note 18.] New requirement on 270 V dc power was added. Original draft of Rev D required all three supplies to be on, but it was later determined that 115 VAC and 270 VDC should never be applied at the ASI simultaneously.
Pages 37, 45, 55

[Note 19.] Paragraph was reworded to clarify the intent. A new requirement was added, limiting voltage drop while carrying rated current to 0.2 V. This was added to provide specific, measurable criteria for verifying structure ground integrity.
Pages 41, 52

[Note 20.] Last sentence of paragraph 5.2.9.3 was deleted because it conflicts with requirements of paragraph 5.2.9.9.
Page 43

[Note 21.] SAE AS-1B committee recommended this change to prohibit stores from connecting 115 VAC power returns to ground in 1996.
Page 43

[Note 22.] The first sentence of this paragraph was modified to incorporate new requirements on 270 V dc power.
Pages 56, 56, 56

[Note 23.] Reworded to clarify use of dummy contacts.
Page 57

[Note 24.] There were two paragraphs labeled “5.6.5” in Rev C of the standard. The second 5.6.5 and subsequent paragraphs in this subsection have been renumbered.
Page 57

[Note 25.] The footnote associated with contact location W on this table was changed to “5”. This resolves a discrepancy between MIL-STD-1760C and MIL-STD-1560 regarding the number of each contact type required. Also, ”Reserved” was removed from the 270 V dc power contacts.
Page 60

[Note 26.] MIL-C-39029 was added in the header to clarify.
Page 61

[Note 27.] ”Reserved” was removed from the 270 V dc power contacts.
Page 61

[Note 28.] Appendix A was added to define GPS RF requirements. It replaces the previously blank Appendix A.
Page 65

[Note 29.] The store-to-aircraft part of time tagging is added in Rev D, to complement the aircraft-to-store part that was added in Rev C Notice 1.
Page 78, 93, 93

[Note 30.] Table B-XVI, the word “blank” is replaced with the word “space,” since this is the correct term for the ASCII character often called “blank”. No technical change was intended.
Page 119

[Note 31.] Table B-XIX, lines 7 and 12 were corrected.
Page 122

[Note 32.] Table B-XXVI, entities 28 and 29, the word “blank” is replaced with the word “space” to use the correct term for this ASCII character.
Page 129

[Note 33.] Table B-XXXVII , note 5 was changed to refer to word 17, to correct a typo.
Page 157

[Note 34.] Table B-XLVII, “invalidity for words 17-32” was changed to “invalidity for words 17-30” to correct a typo.
Page 167

CONCLUDING MATERIAL

Custodians:
Army - AV
Navy - AS
Air Force - 11

Review activities:
Navy - EC, SH, OS, MC, TD

Preparing activity:
Air Force - 11

Project No. SESS-0044